TRANSFER

DESCRIPTION

TRANSFER

The Transfer transmits the drive force from the transmission to the front wheels, switching between 2WD, 4WD (High) and 4WD (Low).
In the Truck the types of gear used during deceleration produce 2 types of transfer.
The specifications and cross–section diagrams are as shown.

RF1A Type Transfer

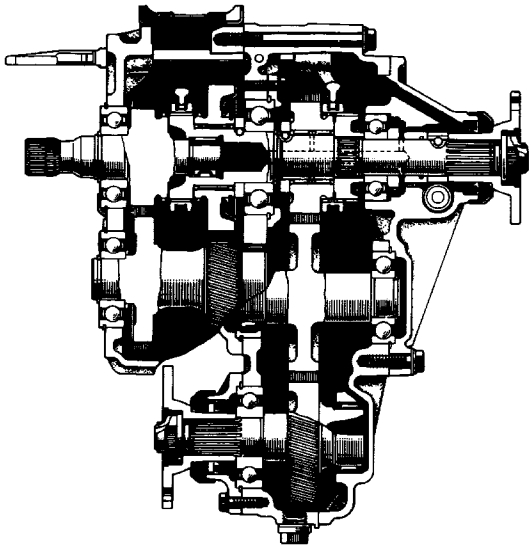

VF1A Type Transfer

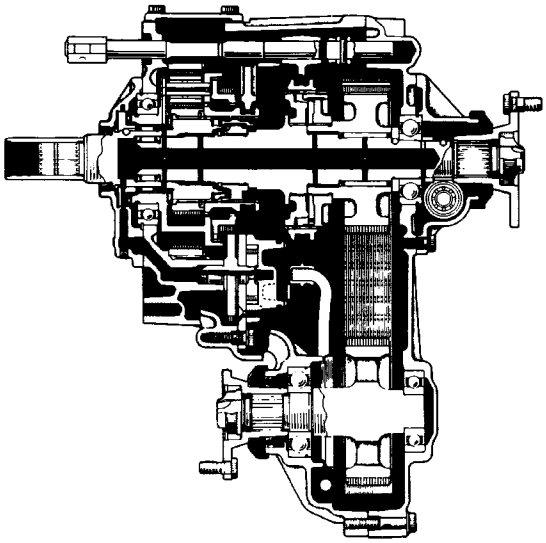

E9702 TF0637

Specification

Transfer / Items		RF1A Type Transfer	VF1A Type Transfer	
Type of Engine		22R-E	22R-E	3VZ-E
Type of Transmission		W56	G58, *A340F	R150F
Type of Reduction Gear		Counter Gear	Planetary Gear	
Gear Ratio	H2 and H4	1.000	1.000	
	L4	2.276	2.566	
Oil Capacity liters (US qts., Imp. qts.)		1.6 (1.7, 1.4)	1.1 (1.2, 1.0)	
Oil Grade		API GL-4 or GL-5	API GL-4 or GL-5	
Oil Viscosity		SAE 75W-90	SAE 75W-90	

Automatic Transmission

PRECAUTIONS

When working with FIPG material, you must be observe the following.

- Using a razor blade and gasket scraper, remove all the old packing (FIPG) material from the gasket sur–faces.
- Thoroughly clean all components to remove all the loose material.
- Clean both sealing surfaces with a non–residue solvent.
- Apply the seal packing in approx. 1 mm (0.04 in.) bead along the sealing surface.
- Parts must be assembled within 10 minutes of application. Otherwise, the packing (FIPG) material must be removed and reapplied.

TROUBLESHOOTING

Problem	Possible cause	Remedy	Page
Hard to shift or will not shift	Transfer faulty	Disassemble and inspect transfer	TF–4, 32
Transfer jumps out of gear	Transfer faulty	Disassemble and inspect transfer	TF–4, 32

PRECAUTIONS

When working with FIPG material, you must be observe the following.

- Using a razor blade and gasket scraper, remove all the old packing (FIPG) material from the gasket sur–faces.
- Thoroughly clean all components to remove all the loose material.
- Clean both sealing surfaces with a non–residue solvent.
- Apply the seal packing in approx. 1 mm (0.04 in.) bead along the sealing surface.
- Parts must be assembled within 10 minutes of application. Otherwise, the packing (FIPG) material must be removed and reapplied.

TROUBLESHOOTING

Problem	Possible cause	Remedy	Page
Hard to shift or will not shift	Transfer faulty	Disassemble and inspect transfer	TF–4, 32
Transfer jumps out of gear	Transfer faulty	Disassemble and inspect transfer	TF–4, 32

REMOVAL OF TRANSFER

1. REMOVE TRANSFER WITH TRANSMISSION

MT – See pages MT–14 to 25

AT – See pages AT–210 and 211

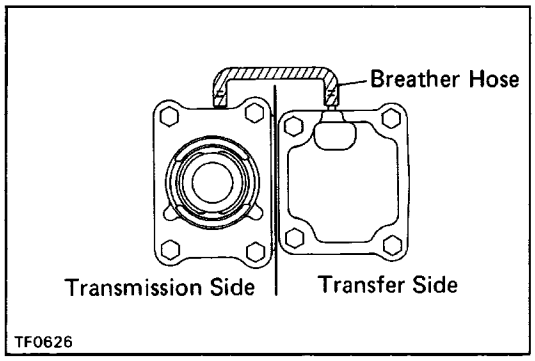

2. (22R–E1G58, A340F)
REMOVE BREATHER HOSE

Disconnect the breather hose from transfer upper cover and transmission control retainer.

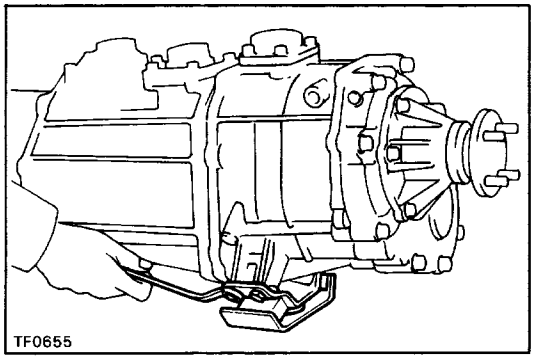

3. REMOVE ENGINE REAR MOUNTING

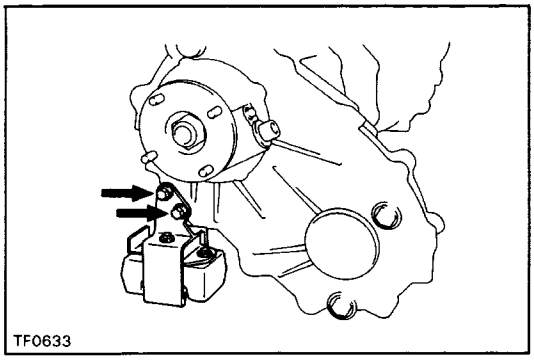

4. (Regular Cab w/ VF1A Type Transfer)
REMOVE DYNAMIC DAMPER

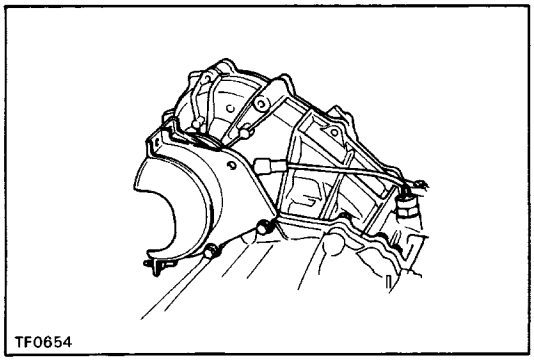

5. REMOVE PROPELLER SHAFT UPPER DUST COVER AND TRANSFER FROM TRANSMISSION

(a) Remove the dust cover bolt from the bracket.
(b) Remove the transfer adaptor rear mounting bolts.
(c) Pull the transfer straight up and remove it from the transmission.
HINT: Take care not to damage the adaptor rear oil seal with the transfer input gear spline.

INSTALLATION OF TRANSFER

1. INSTALL TRANSFER AND PROPELLER SHAFT UPPER DUST COVER TO TRANSMISSION WITH NEW GASKET

(a) Shift the two shift fork shafts to the high–four position.

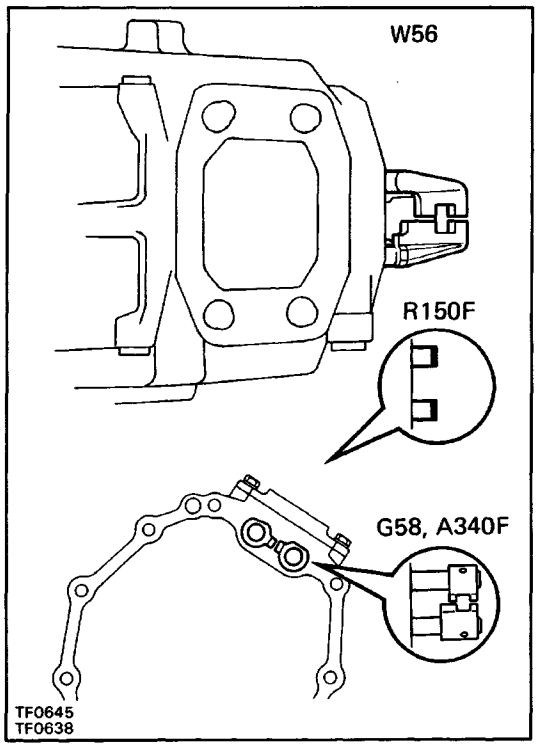

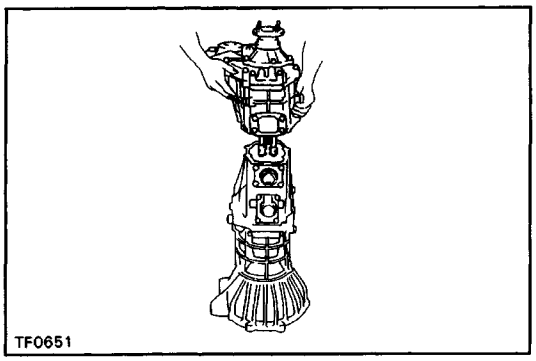

(b) Apply MP grease to the adaptor oil seal.
(c) Place a new gasket to the transfer adaptor.
(d) Install the transfer to the transmission.
HINT: Take care not to damage the oil seal by the input gear spline when installing the transfer.

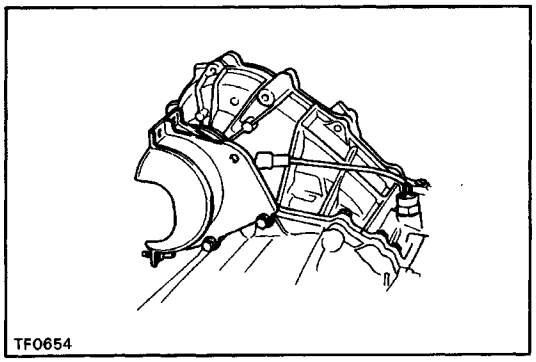

(e) Install and torque the bolts with the propeller shaft upper dust cover.
Torque:
W56 39 N–m (400 kgf–cm, 29 ft–lbf)
R 150F, G58, A340F
37 N–m (380 kgf–cm, 27 ft–lbf)

(f) Install the dust cover bolt to the bracket.
Torque:
R 150F, G58, A340F
23 N–m (230 kgf–cm, 17 ft–lbf)
W56 39 N–m (400 kgf–cm, 29 ft–lbf)

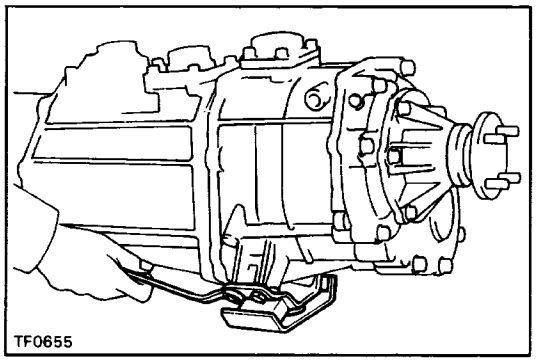

2. INSTALL ENGINE REAR MOUNTING
Torque: 25 N–m (260 kgf–cm, 19 ft–lbf)

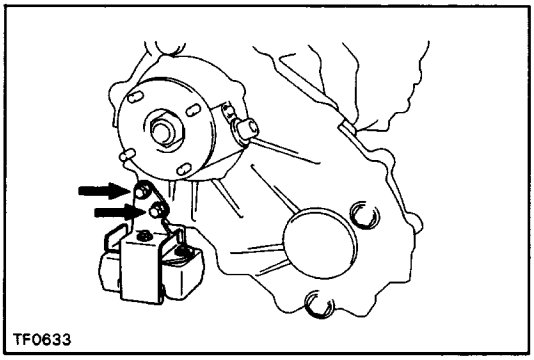

3. (Regular Cab wI VF 1 A Type Transfer)
INSTALL DYNAMIC DAMPER
Torque: 37 N–m (380 kgf–cm, 27 ft–lbf)

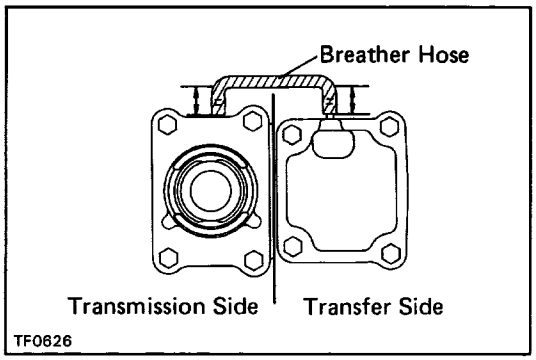

4. (22R–EIG58, A340F)
INSTALL BREATHER HOSE
Connect the breather hose for transfer upper cover and transmission control retainer as shown.
Hose depth: 13 mm (0.51 in.)

5. INSTALL TRANSFER WITH TRANSMISSION
MT – See pages MT–14 to 2 5.
AT – See pages AT–210 and 211.
6. FILL TRANSMISSION AND TRANSFER WITH OIL
MT – See page MT–24.
AT – See page AT–181.
7. PERFORM ROAD TEST
Check for abnormal noise and smooth operation.

(RF1A TYPE TRANSFER) COMPONENTS

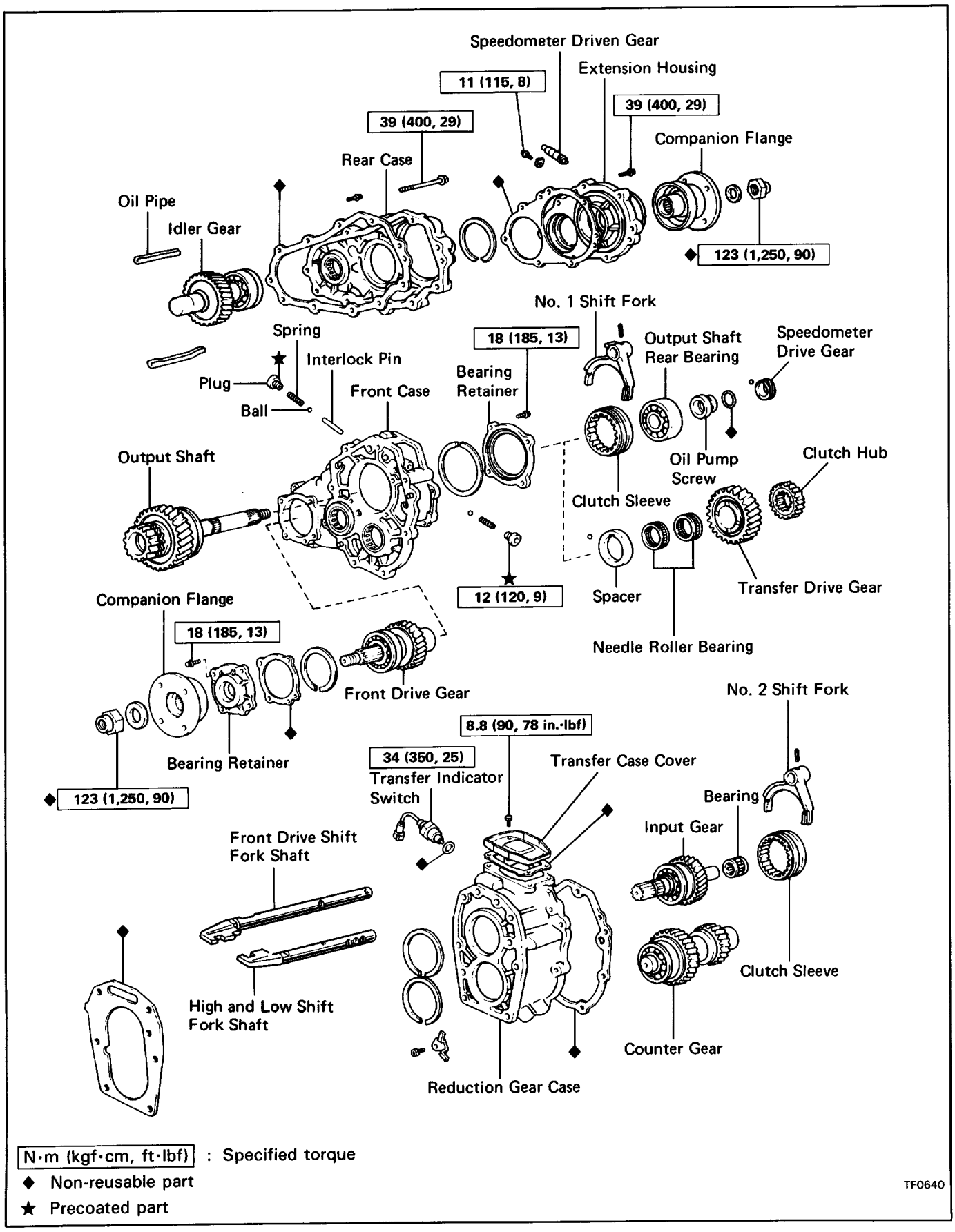

DISASSEMBLY OF TRANSFER

(See page TF–7)

1. REMOVE No. 1 SPEED SENSOR

2. REMOVE TRANSFER INDICATOR SWITCH

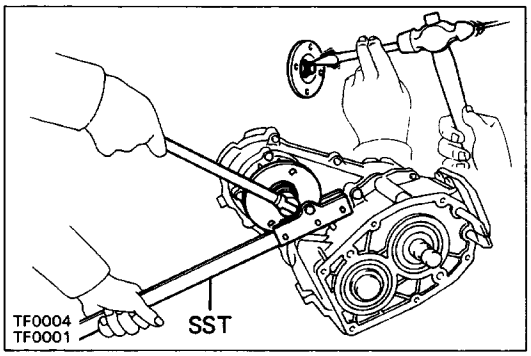

3. REMOVE FRONT COMPANION FLANGE

(a) Using a hammer and chisel, loosen the staked part of the nut.

(b) Using SST to hold the flange, remove the nut and washer.

SST 09330–00021

(c) Remove the companion flange.

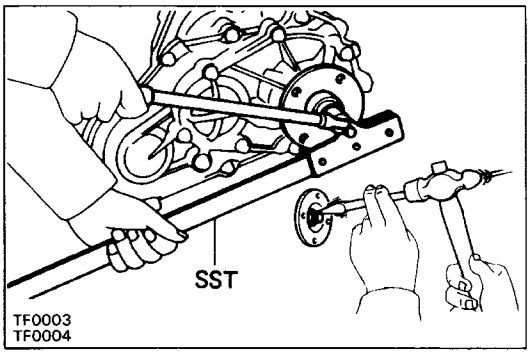

HINT: If the companion flange is difficult to remove, use SST.

4. REMOVE REAR COMPANION FLANGE

(a) Using a hammer and chisel, loosen the staked part of the nut.

(b) Using SST to hold the flange, remove the nut and washer.

SST 09330–00021

(c) Remove the companion flange.

5. REMOVE EXTENSION HOUSING

Remove the seven bolts and remove the extension housing.

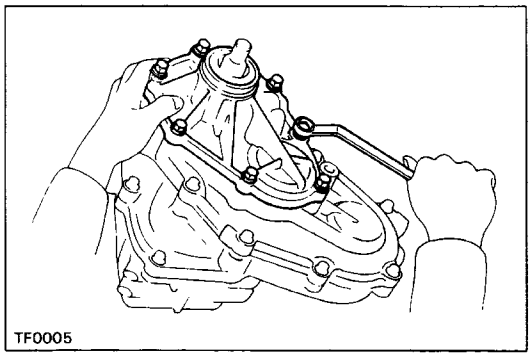

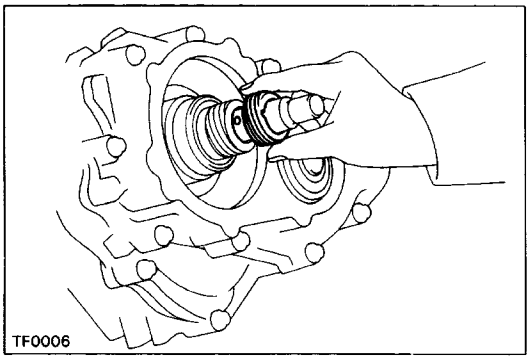

6. REMOVE SPEEDOMETER DRIVE GEAR, STEEL BALL, OIL PUMP SCREW AND BEARING

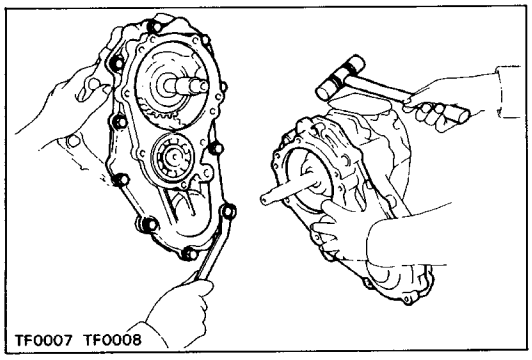

7. REMOVE REAR CASE

(a) Remove the ten bolts.

(b) Using a plastic hammer, remove the rear case with the idler gear.

HINT: Hold the front case so the rear does not descend. If it descends, the clutch hub and steel ball may fall out.

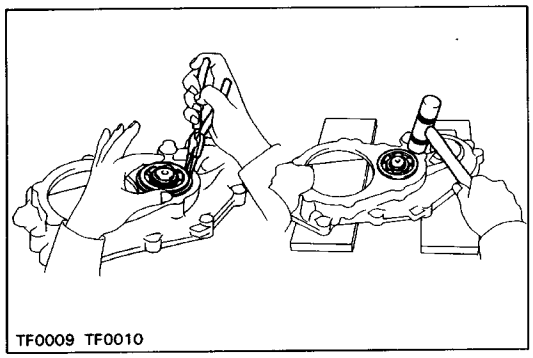

8. REMOVE IDLER GEAR FROM REAR CASE

(a) Using snap ring pliers, remove the snap ring.

(b) Using a plastic hammer, tap out the idler gear from the rear case.

HINT: Place the rear case on something soft such as wooden blocks.

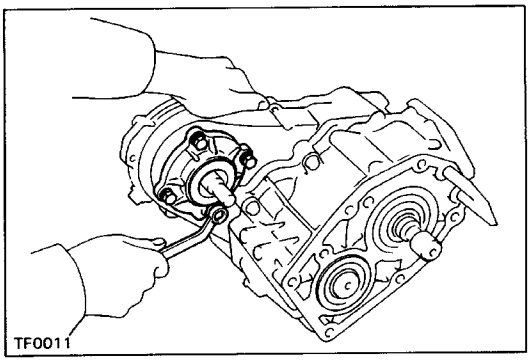

9. REMOVE BEARING RETAINER

Remove the four bolts and remove the bearing retainer.

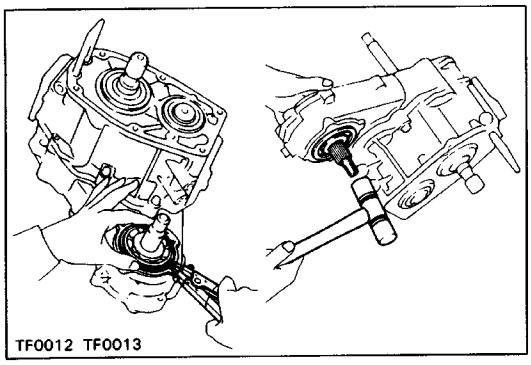

10. REMOVE FRONT DRIVE GEAR

(a) Using snap ring pliers, remove the snap ring.

(b) Using a plastic hammer, tap out the front drive gear from the front case.

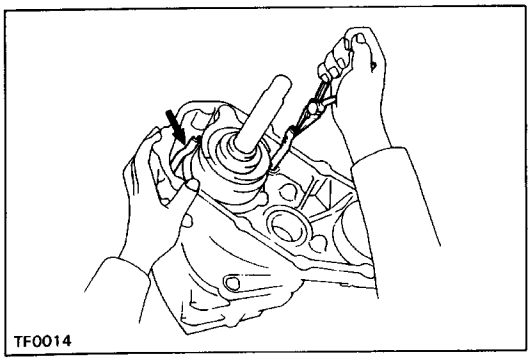

11. REMOVE OIL PIPES

Using pliers, remove the two oil pipes.

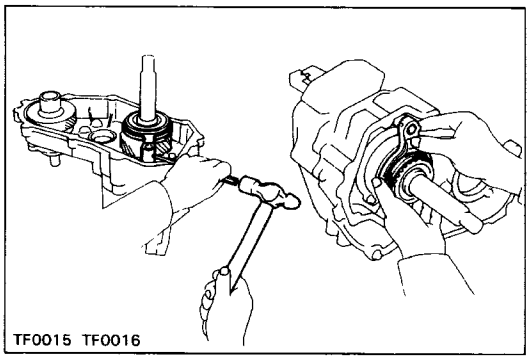

12. REMOVE SHIFT NO. 1 FORK AND CLUTCH SLEEVE

(a) Shift the fork shafts to the high–low position.
(b) Using a pin punch and a hammer, drive out the slotted spring pin.
(c) Remove the shift No. 1 fork together with the clutch sleeve.

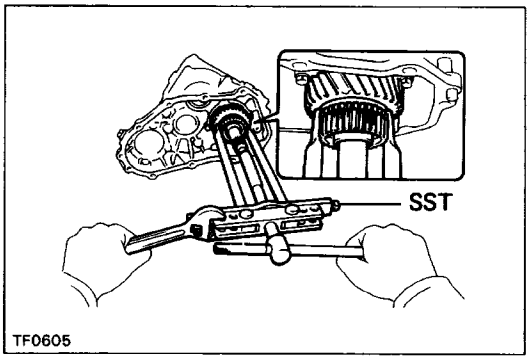

13. REMOVE CLUTCH HUB AND TRANSFER DRIVE GEAR

Using SST, remove clutch hub and transfer drive gear.
SST 09950–20017

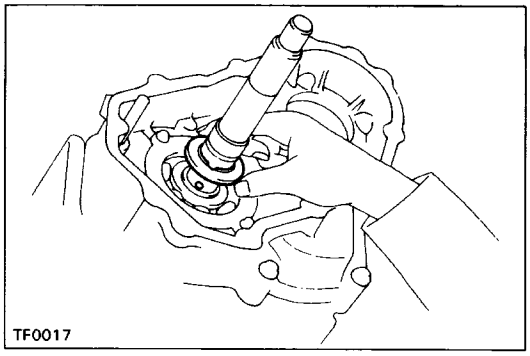

14. REMOVE NEEDLE ROLLER BEARING, NO.2 SPACER AND STEEL BALL

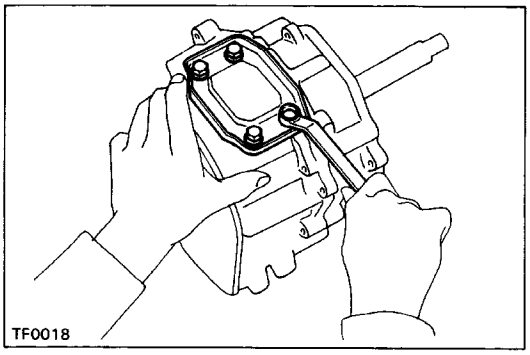

15. REMOVE TRANSFER CASE COVER

Remove the four bolts and remove the transfer case cover and gasket.

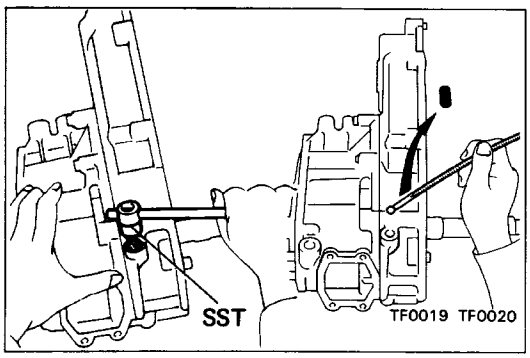

16. REMOVE STRAIGHT SCREW PLUGS, SPRINGS AND LOCKING BALLS

(a) Using SST, remove the plug on the right side.
SST 09313–30021
(b) Using a magnetic finger, remove the spring and ball.
(c) Remove the plug, spring and ball on the left side in the same procedure.

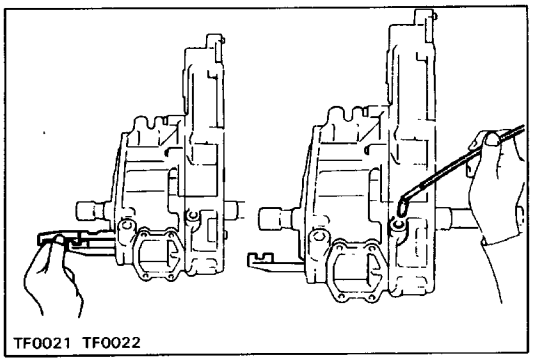
TF0021 TF0022

17. REMOVE FRONT DRIVE SHIFT FORK SHAFT

18. REMOVE INTERLOCK PIN

Using a magnetic finger, remove the interlock pin.

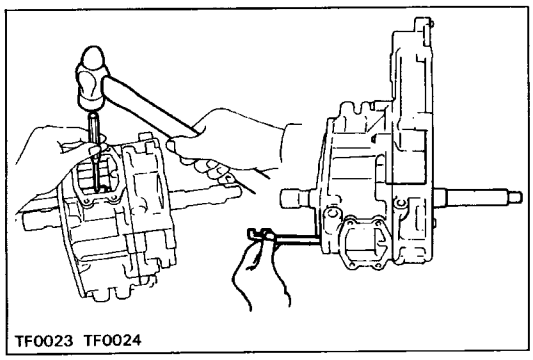
TF0023 TF0024

19. REMOVE HIGH AND LOW SHIFT FORK SHAFT

(a) Using a pin punch and a hammer, drive out the slot–ted spring pin.

(b) Remove the shaft.

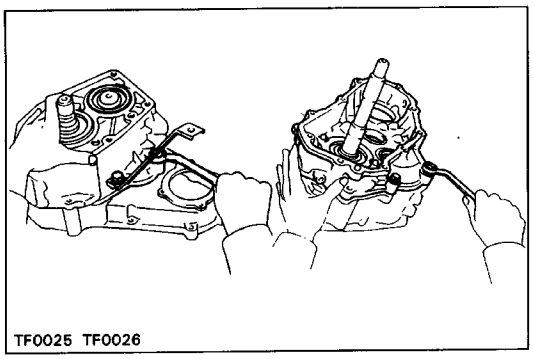
TF0025 TF0026

20. REMOVE FRONT CASE

(a) Remove the four bolts.

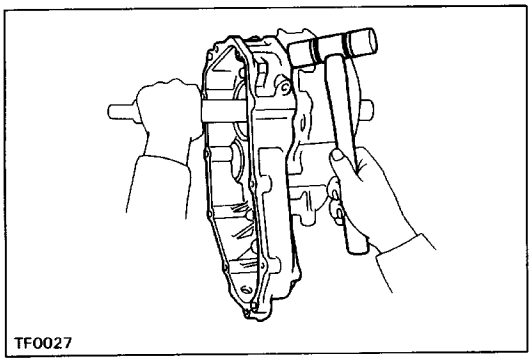
TF0027

(b) Using a plastic hammer, remove the front case with the output shaft.

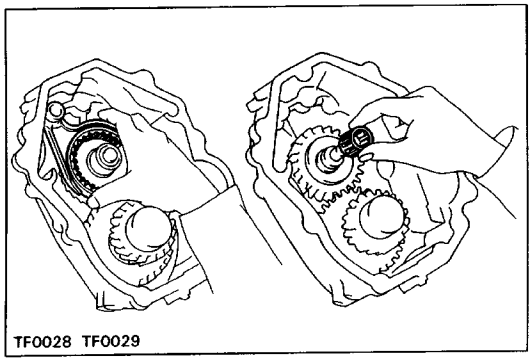
TF0028 TF0029

21. REMOVE NO.2 FORK WITH CLUTCH SLEEVE AND NEEDLE ROLLER BEARING FROM INPUT SHAFT

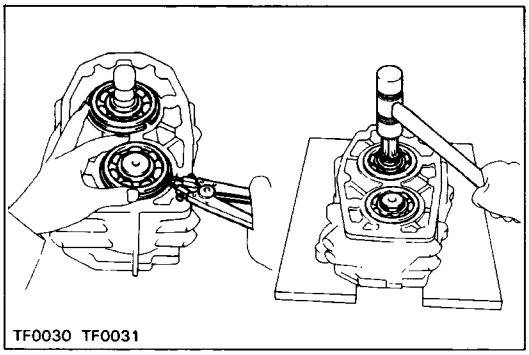
TF0030 TF0031

22. REMOVE INPUT GEAR AND COUNTER GEAR FROM REDUCTION GEAR CASE

(a) Using a snap ring pliers, remove the two snap rings.
(b) Using a plastic hammer, tap out the input gear and counter gear from the reduction gear case.

HINT: Place the reduction gear case on something soft such as wooden blocks.

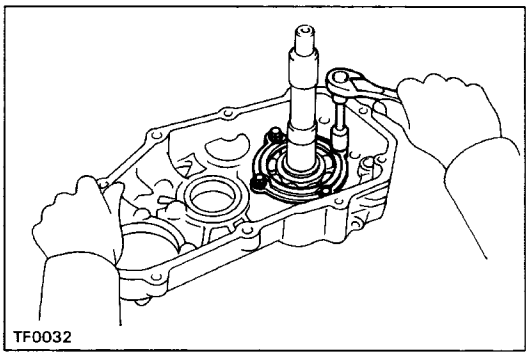
TF0032

23. REMOVE OUTPUT SHAFT FROM FRONT CASE

(a) Remove the four bearing retainer bolts and remove the bearing retainer.

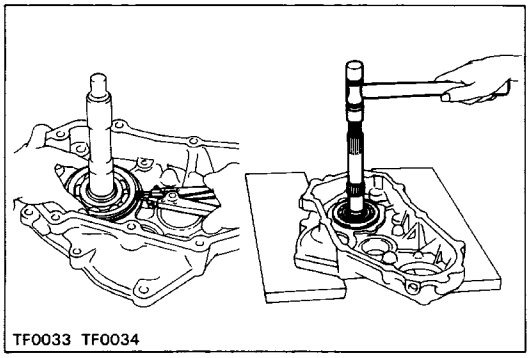
TF0033 TF0034

(b) Using a snap ring pliers, remove the snap ring.
(c) Using a plastic hammer, tap out the output shaft from the front case.

HINT: Place the front case on something soft such as wooden blocks.

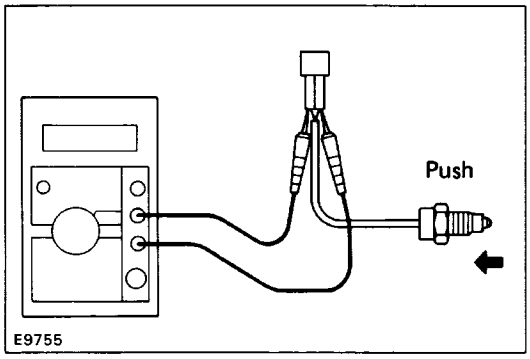

E9755

24. INSPECTION OF TRANSFER INDICATOR SWITCH

Check that there is continuity between terminals as shown.

Switch Position	Specified
Push	Continuity
Free	No continuity

If operation is not as specified, replace the switch.

COMPONENT PARTS
Input Gear
COMPONENTS

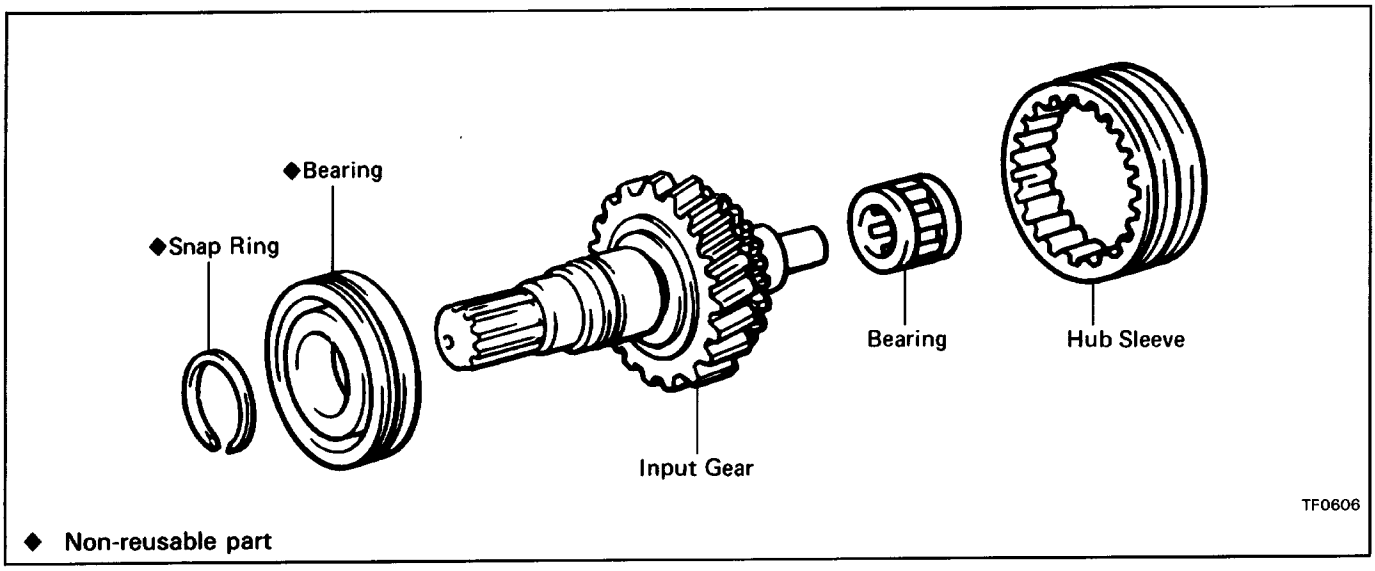

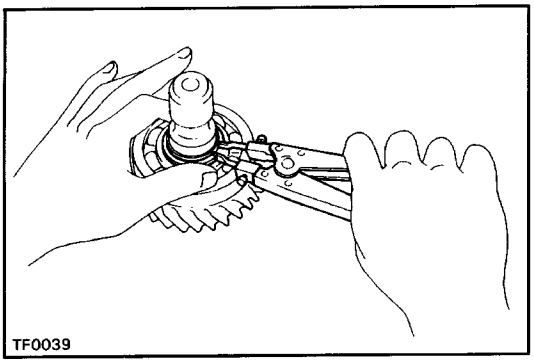

REPLACEMENT OF BEARING

IF NECESSARY, REPLACE INPUT GEAR BEARING

(a) Using snap ring pliers, remove the snap ring.

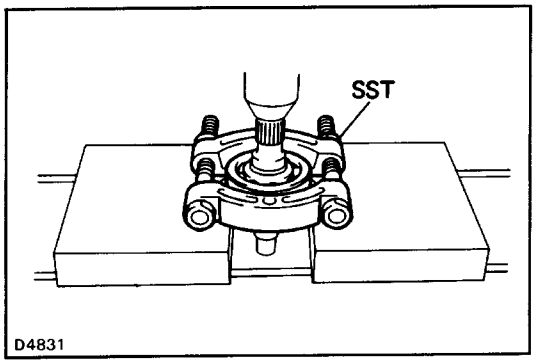

(b) Using SST and a press, remove the bearing.
SST 09950–00020

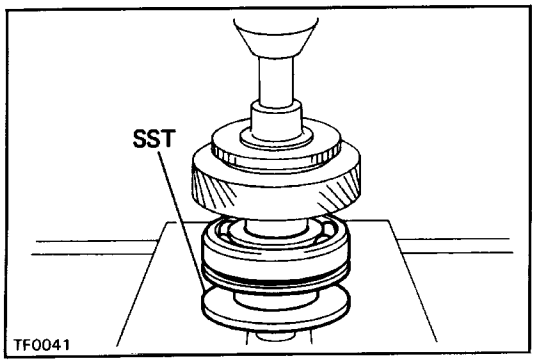

(c) Using SST, press in a new bearing.
SST 09316–60010 (09316–00070)

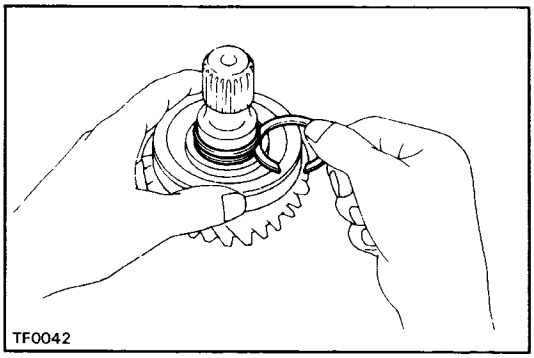

(d) Select a snap ring that will allow minimum axial play and install it on the shaft.
Maximum play: 0.15 mm (0.0059 in.)

Mark	Thickness mm (in.)
1	2.05 – 2.10 (0.0807 – 0.0827)
3	2.15 – 2.20 (0.0846 – 0.0866)
5	2.25 – 2.30 (0.0886 – 0.0906)

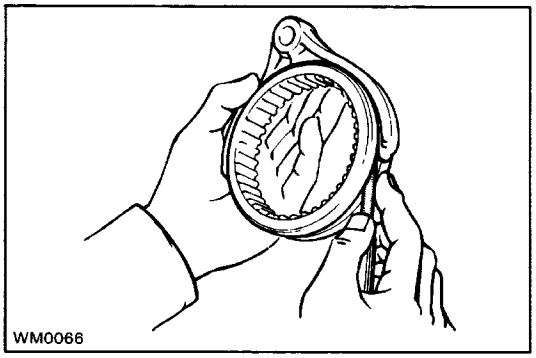

INSPECTION OF HUB SLEEVE AND SHIFT FORK MEASURE

CLEARANCE OF SHIFT FORK AND HUB SLEEVE

Using a feeler gauge, measure the clearance between the hub sleeve and shift fork.
Maximum clearance: 1.0 mm (0.039 in.)
If the clearance exceeds the limit, replace the shift fork or hub sleeve.

Idler Gear

COMPONENTS

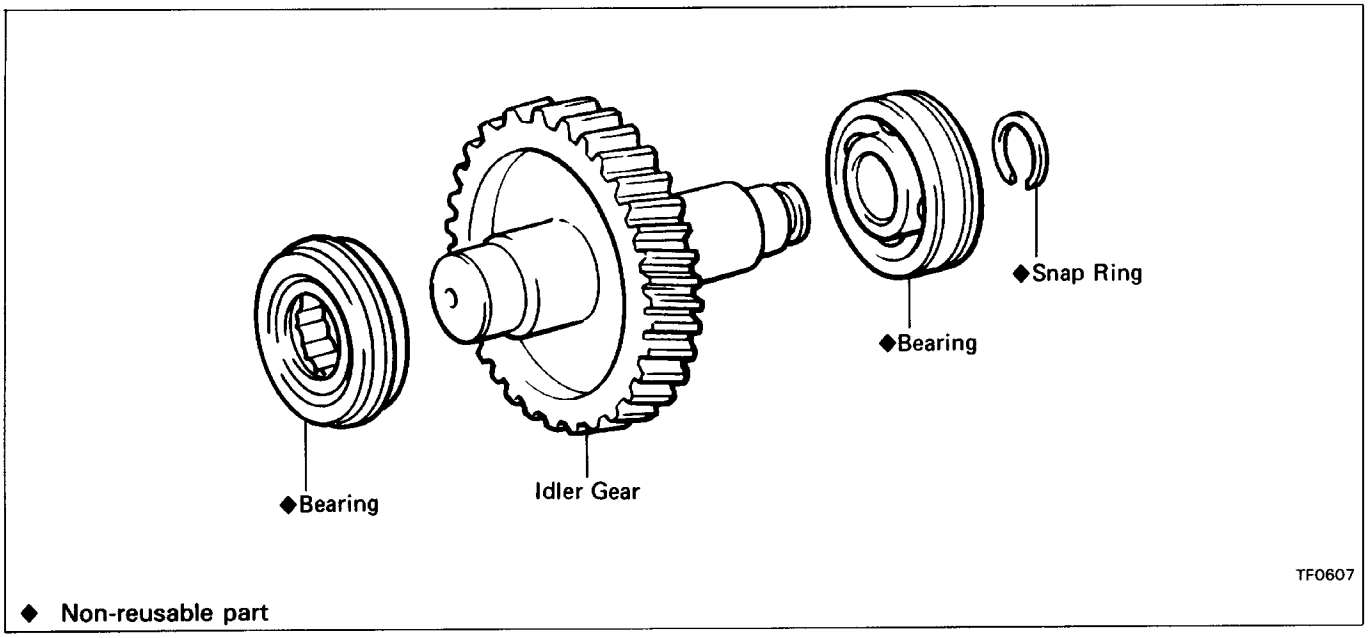

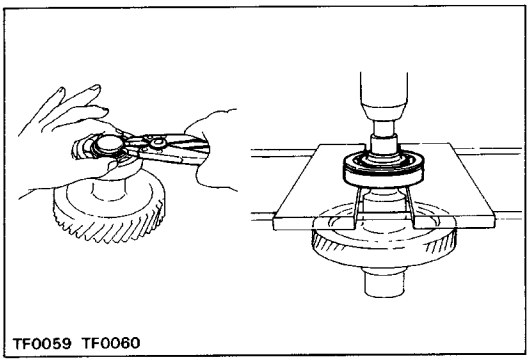

REPLACEMENT OF BEARING

1. IF NECESSARY, REPLACE IDLER GEAR REAR BEARING

(a) Using snap ring pliers, remove the snap ring.

(b) Using a press and 19 mm socket wrench, remove the bearing.

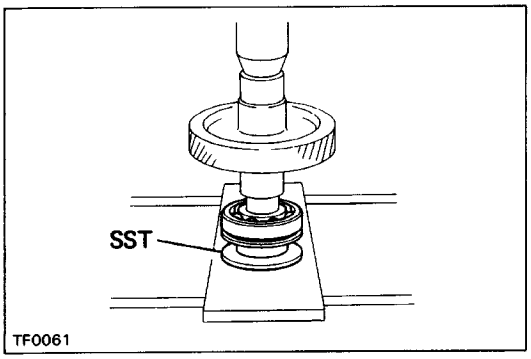

(c) Using SST and a press, press in a new bearing.
SST 09316–60010 (09316–00020)

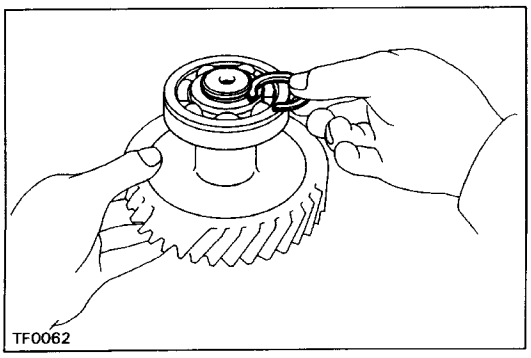

(d) Select a snap ring that will allow minimum axial play and install it on the shaft.

Maximum play: 0.15 mm (0.0059 in.)

Mark	Thickness mm(in.)
A	1.50 – 1.55 (0.0591 – 0.0610)
B	1.60 – 1.65 (0.0630 – 0.0650)

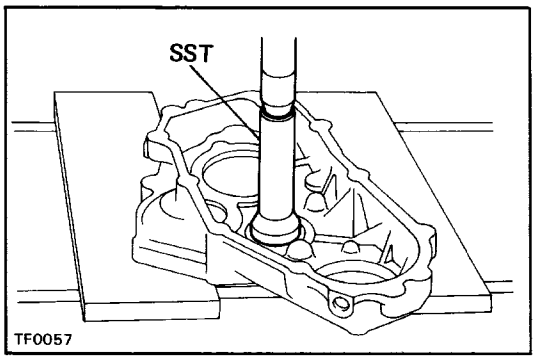

2. IF NECESSARY, REPLACE IDLER GEAR FRONT BEARING

(a) Using SST and a press, press out the bearing.
SST 09310–35010

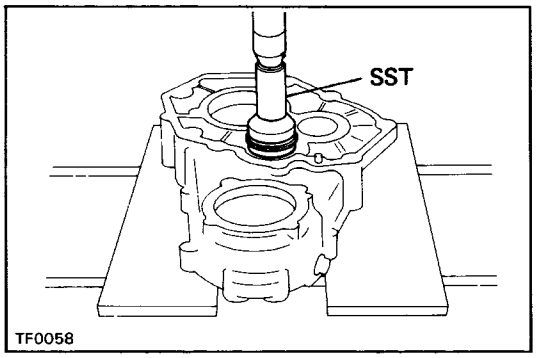

(b) Using SST and a press, press in a new bearing up to the position of the snap ring.
SST 09310–35010

Counter Gear

COMPONENTS

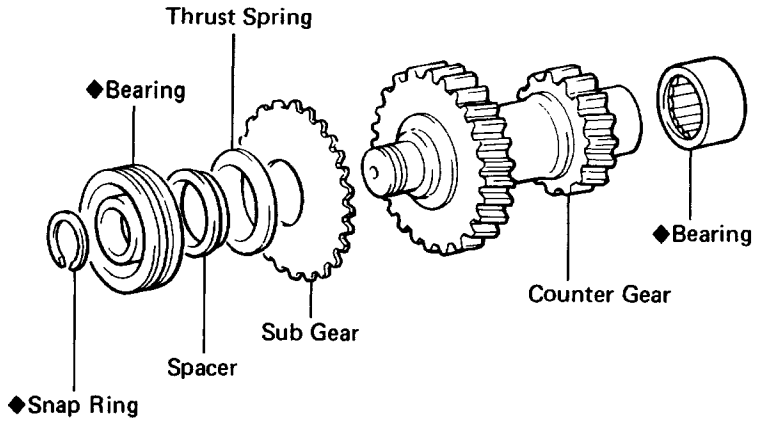

◆ Non-reusable part

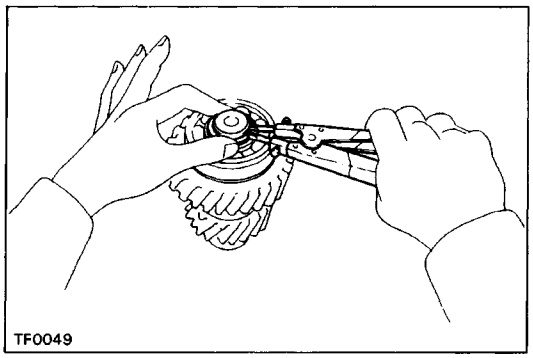

REPLACEMENT OF BEARINGS

1. IF NECESSARY, REPLACE COUNTER GEAR FRONT BEARING AND SUB GEAR

(a) Using snap ring pliers, remove the snap ring.

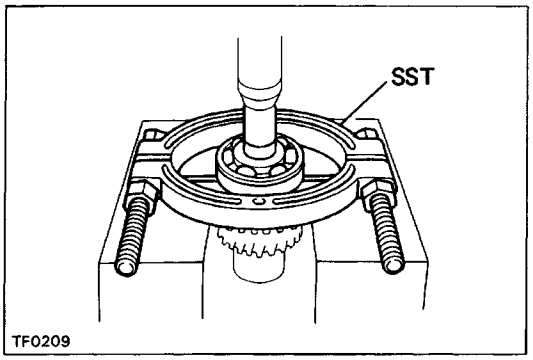

(b) Using SST and a press, remove the bearing.
SST 09950–00020
(c) Remove the spacer, thrust spring and sub gear.
(d) Install the sub gear, thrust spring and spacer on the counter gear.

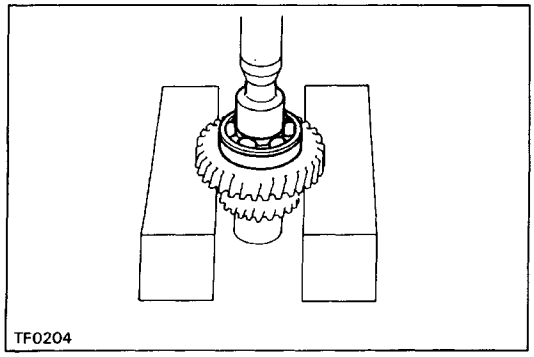

(e) Using a press and 32 mm socket wrench, install a new bearing.

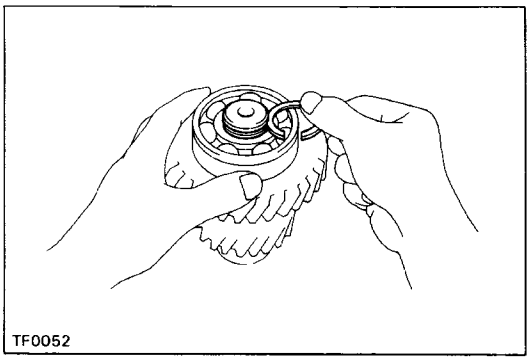

(f) Select a snap ring that will allow minimum axial play and install it on the shaft.
Maximum play: 0.15 mm (0.0059 in.)

Mark	Thickness mm (in.)
1	2.10 – 2.15 (0.0827 – 0.0846)
3	2.20 – 2.25 (0.0866 – 0.0886)

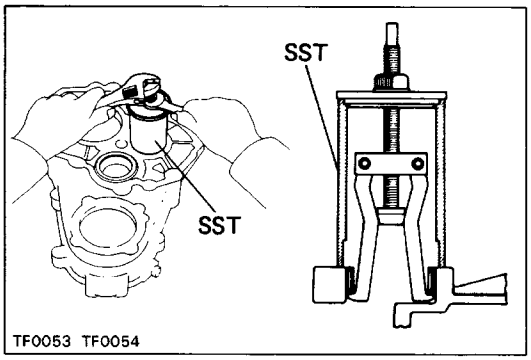

2. IF NECESSARY, REPLACE COUNTER GEAR REAR BEARING
(a) Using SST, remove the bearing.
SST 09612–30012

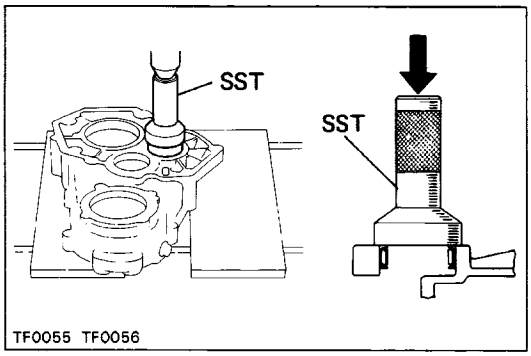

(b) Using SST and a press, press in a new bearing.
SST 09310–35010

Output Shaft

COMPONENTS

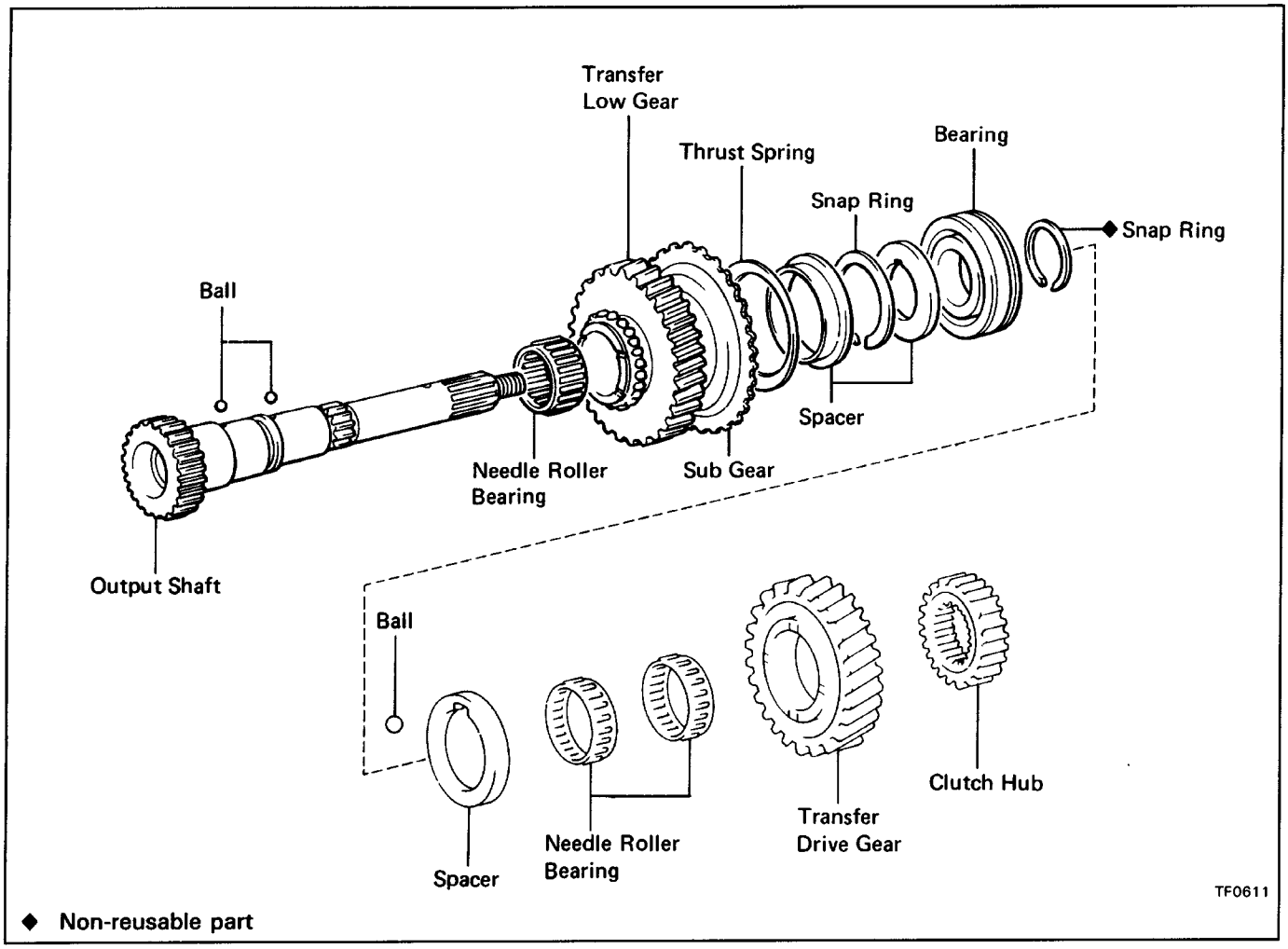

◆ Non-reusable part

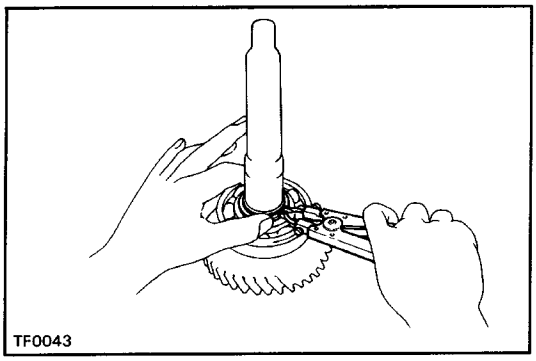

DISASSEMBLY OF OUTPUT SHAFT ASSEMBLY

REMOVE OUTPUT SHAFT FRONT BEARING, LOW GEAR AND SUB GEAR

(a) Using snap ring pliers, remove the snap ring.

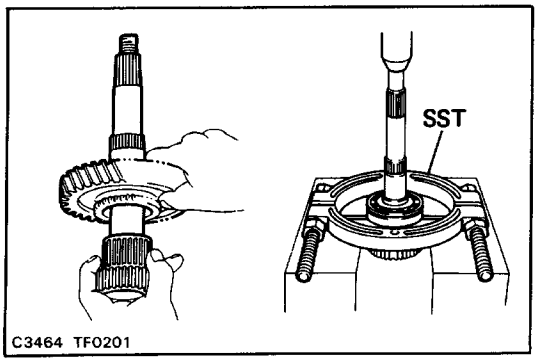

(b) Using SST and a press, remove the bearing, No. 1 spacer and low gear.
SST 09950–00020
(c) Remove the steel ball and needle roller bearing.

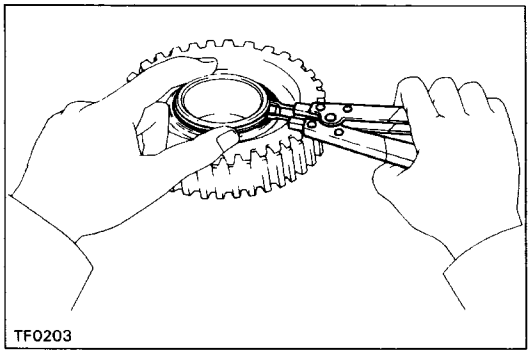

(d) Using snap ring pliers, remove the snap ring from the low gear.
(e) Remove the spacer, thrust spring and sub gear.

INSPECTION OF OUTPUT SHAFT ASSEMBLY

1. CHECK OIL CLEARANCE AND THRUST CLEARANCE OF TRANSFER LOW GEAR

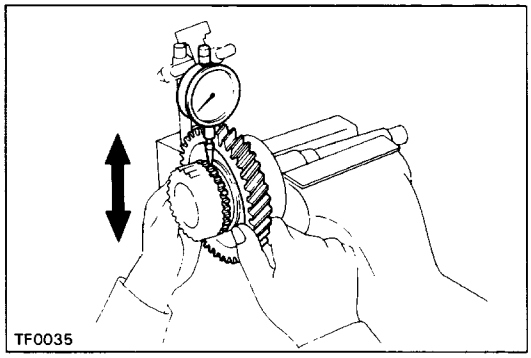

(a) Using a dial indicator, measure the oil clearance between the gear and shaft with the needle roller bearing installed.

Standard clearance: 0.010 – 0.055 mm (0.0004 – 0.0022 in.)
Maximum clearance: 0.075 mm (0.0030 in.)

If the clearance exceeds the limit, replace the gear, needle roller bearing or shaft.

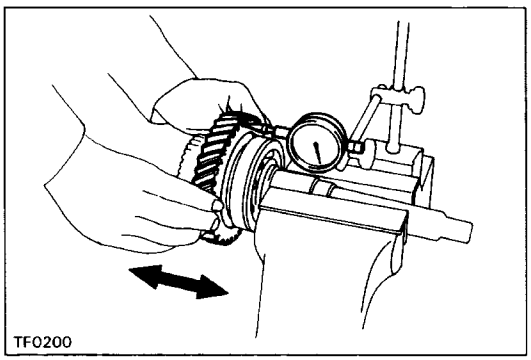

(b) Using a dial indicator, measure the thrust clearance with the spacer and bearing installed.
HINT: Do not touch the shaft end of the dial indicator to the sub gear.

Standard clearance: 0.10 – 0.25 mm (0.0039 – 0.0098 in.)
Maximum clearance: 0.30 mm (0.0118 in.)

If the clearance exceeds the limit, replace the spacer.

2. CHECK OIL CLEARANCE AND THRUST CLEARANCE OF TRANSFER DRIVE GEAR

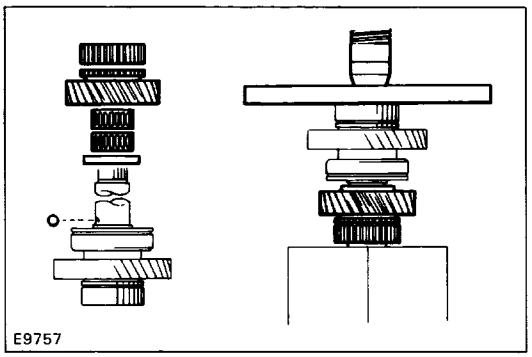

(a) Using a press, install the ball, spacer, two needle roller bearings and transfer drive gear.
HINT: Do not loosen the ball.

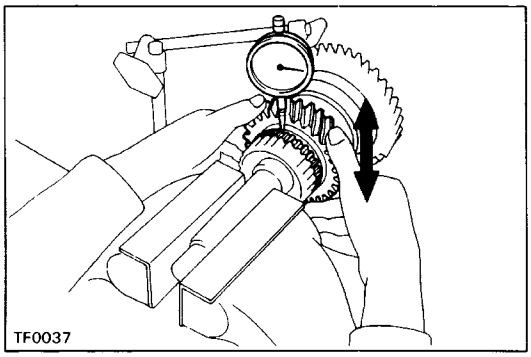

(b) Using a dial indicator, measure the oil clearance between the gear and shaft with the needle roller bearing installed.

Standard clearance: 0.009 – 0.051 mm (0.0004 – 0.0020 in.)
Maximum clearance: 0.71 mm (0.0028 in.)

If the clearance exceeds the limit, replace the gear, needle roller bearing or shaft.

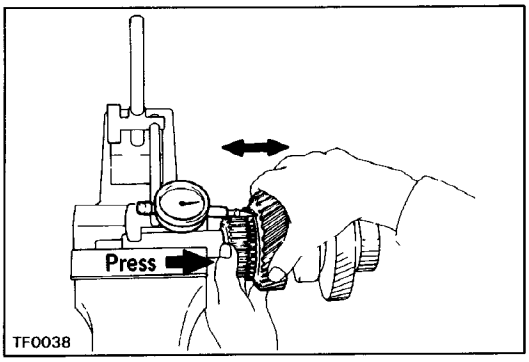

(c) Using a dial indicator, measure the thrust clearance with the clutch hub and spacer installed.
Standard clearance: 0.09 – 0.27 mm (0.0035 – 0.0106 in.)
Maximum clearance: 0.32 mm (0.0126 in.)
If the clearance exceeds the limit, replace the spacer.

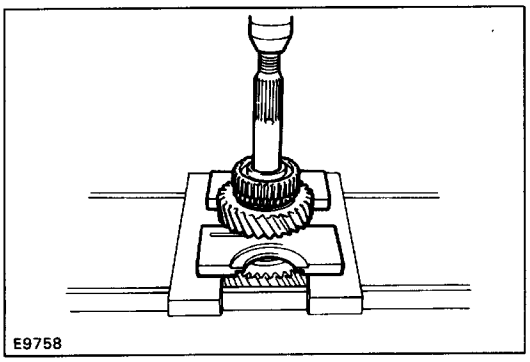

(d) Using a press, remove the ball, spacer, two needle roller bearings and transfer drive gear.

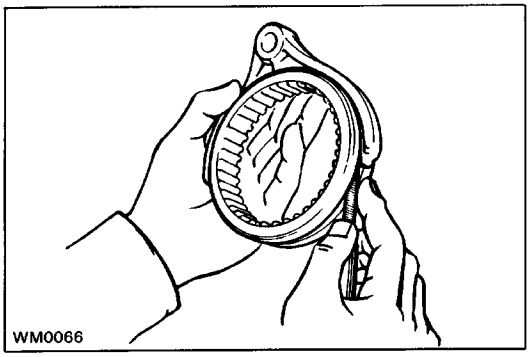

3. MEASURE CLEARANCE OF SHIFT FORKS AND HUB SLEEVES
Using a feeler gauge, measure the clearance between the hub sleeve and shift fork.
Maximum clearance: 1.0 mm (0.039 in.)
If the clearance exceeds the limit, replace the shift fork or hub sleeve.

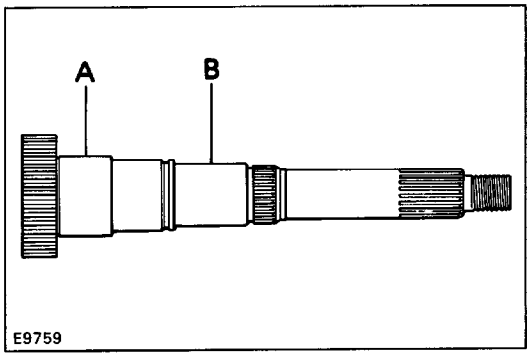

4. INSPECT OUTPUT SHAFT
(a) Using a micrometer, measure the outer diameter of the output shaft.
Maximum outer diameter:
Part A 44.984 mm (1.7710 in.)
B 34.984 mm (1.3773 in.)

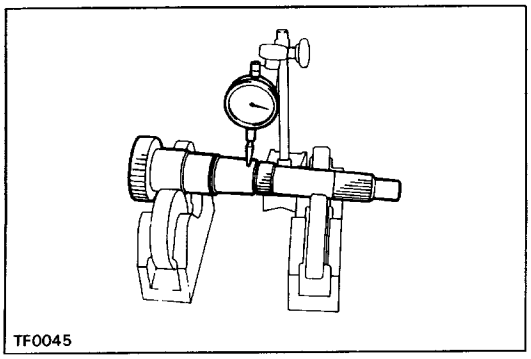

(b) Using a dial indicator, measure the shaft runout.
Maximum runout: 0.03 mm (0.0012 in.)

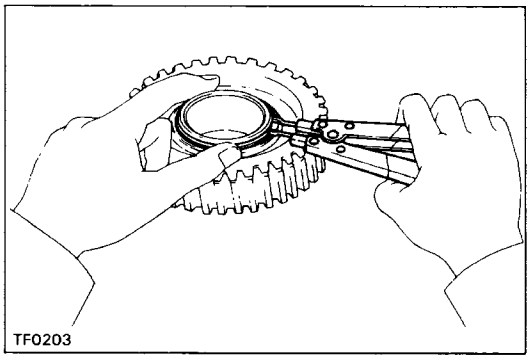

ASSEMBLY OF OUTPUT SHAFT

INSTALL OUTPUT SHAFT FRONT BEARING LOW GEAR AND SUB GEAR

(a) Install the sub gear, thrust spring and spacer.
(b) Using snap ring pliers, install the snap ring.

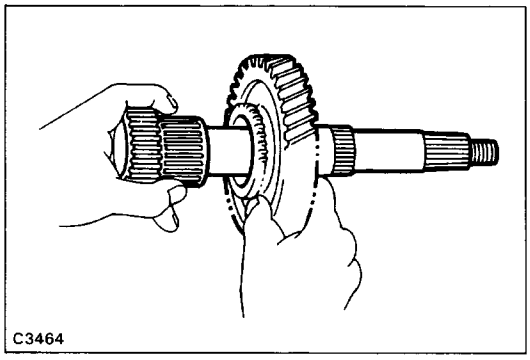

(c) Apply MP grease to the needle roller bearing.
(d) Install the low gear with needle roller bearing to the output shaft.

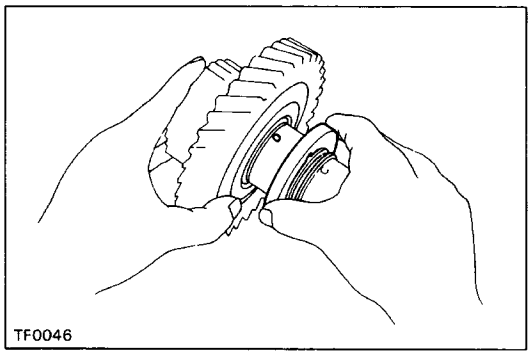

(e) Install the steel ball on the output shaft.
(f) Install the No. 1 spacer.

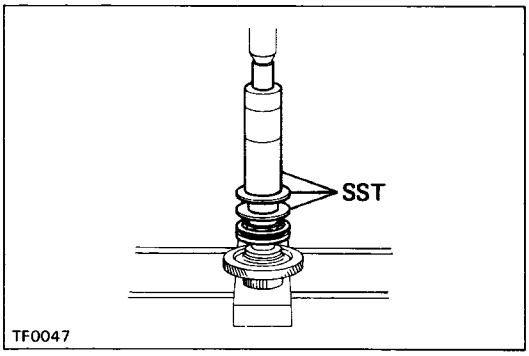

(g) Using SST and a press, install a new bearing.
SST 09316–60010 (09316–00010, 09316–00040, 09316–00050)

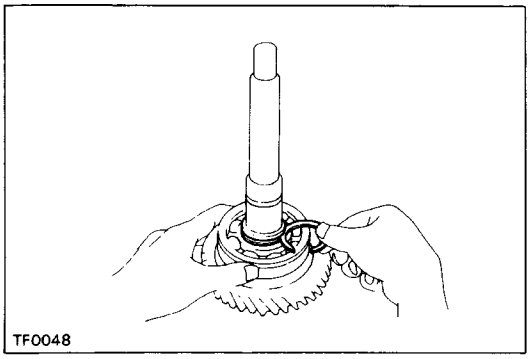

(h) Select a snap ring that will allow minimum axial play and install it on the shaft.
Maximum play: 0.10 mm (0.0039 in.)

Mark	Thickness mm (in.)
0	2.40 – 2.45 (0.0945 – 0.0965)
1	2.45 – 2.50 (0.0965 – 0.0984)
2	2.50 – 2.55 (0.0984 – 0.1004)
3	2.55 – 2.60 (0.1004 – 0.1024)
4	2.60 – 2.65 (0.1024 – 0.1043)
5	2.65 – 2.70 (0.1043 – 0.1063)

Front Drive Gear

COMPONENTS

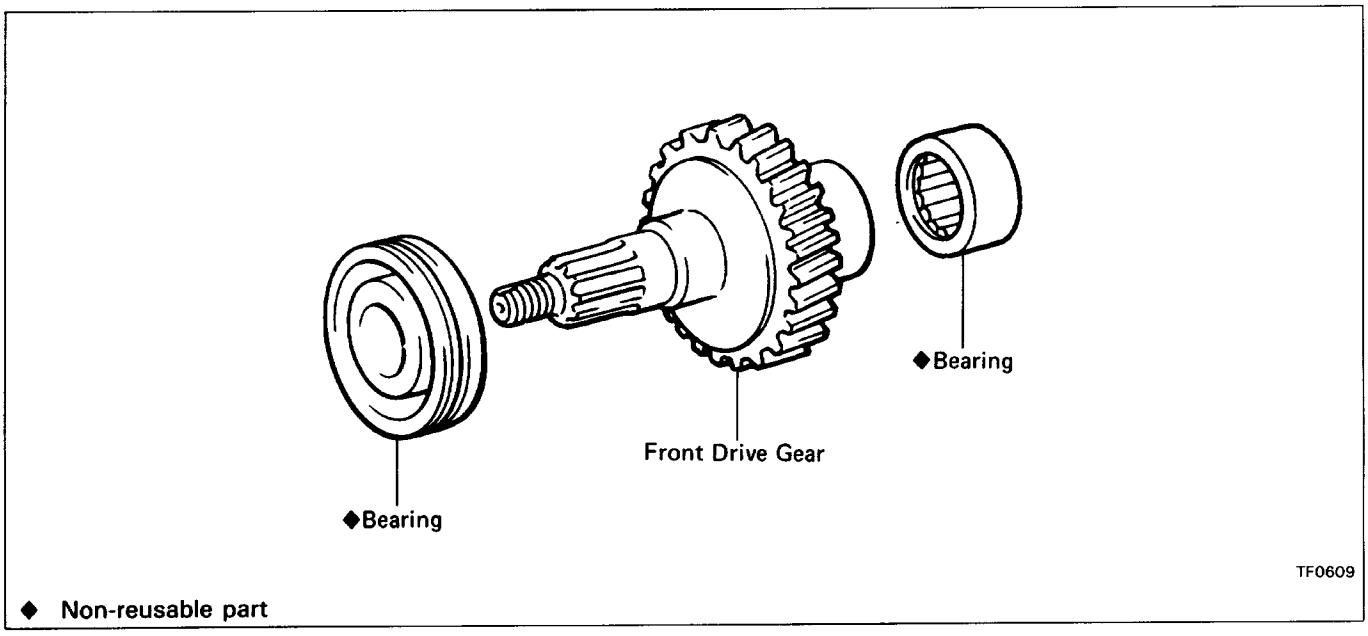

REPLACEMENT OF BEARINGS

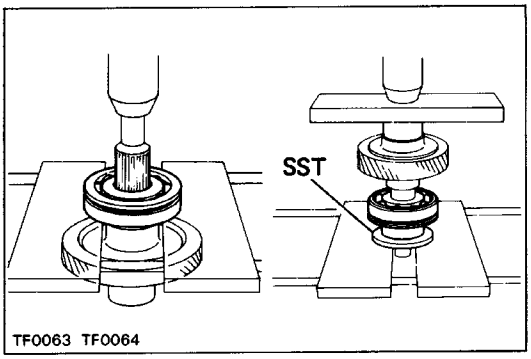

1. IF NECESSARY, REPLACE FRONT DRIVE GEAR FRONT BEARING

(a) Press out the bearing.

(b) Using SST and a press, press in a new bearing.

SST 09316–60010 (09316–00020)

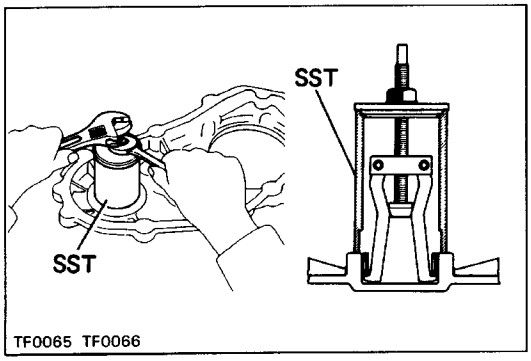

2. IF NECESSARY, REPLACE FRONT DRIVE GEAR REAR BEARING

(a) Using SST, remove the bearing.

SST 09612–30012

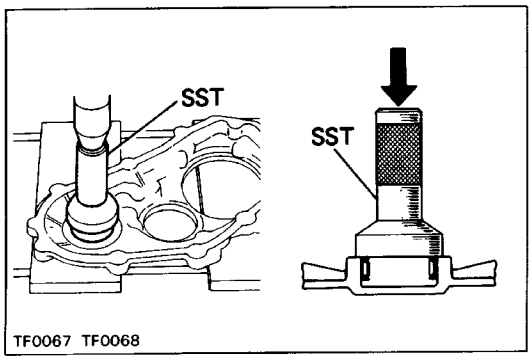

(b) Using SST and a press, press in a new bearing.

SST 09310–3 5010

Oil Seals

COMPONENTS

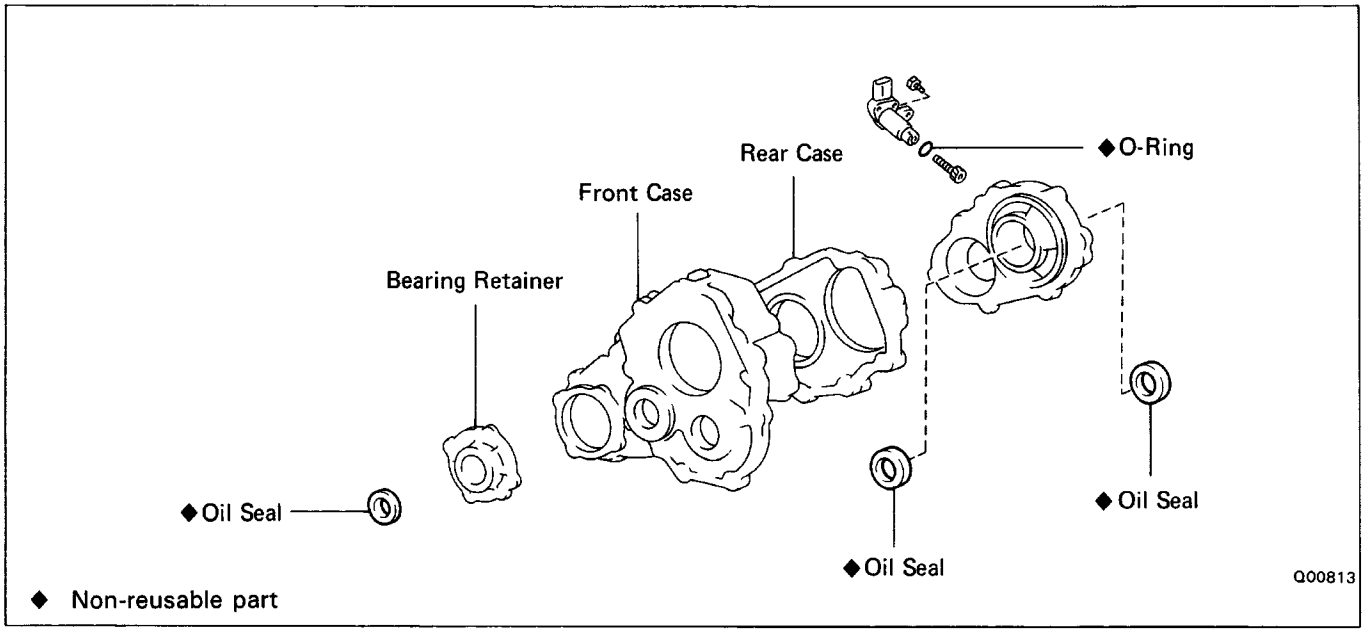

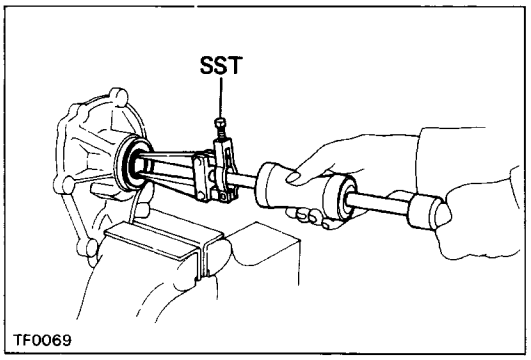

REPLACEMENT OF OIL SEALS

1. IF NECESSARY, REPLACE EXTENSION HOUSING OIL SEAL

(a) Using SST, remove the two oil seals.
SST 09308–00010

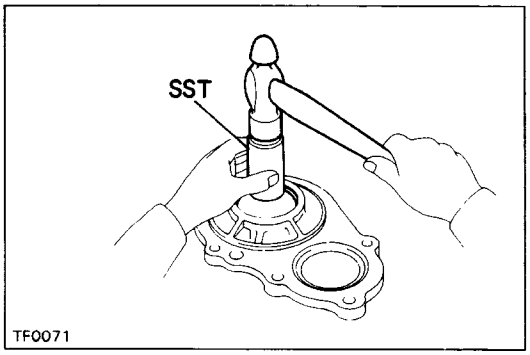

(b) Using SST and a hammer, drive in a new oil seal.
SST 09310–35010
HINT: When assembling a new oil seal for the oil pump screw, position the flat surface upward.

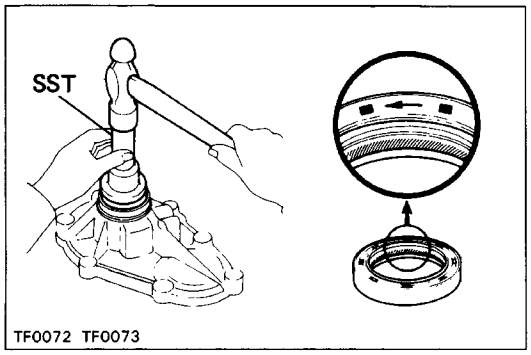

(c) Using SST and a hammer, drive in a new oil seal.
SST 09325–20010
HINT: Take note of the groove direction and be careful not to interchange this seal with the front drive gear oil seal. This oil seal has one arrow mark pointing counter–clockwise to distinguish it from the front drive gear oil seal.

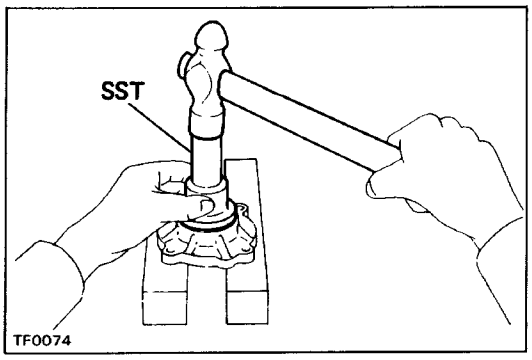

2. IF NECESSARY, REPLACE FRONT DRIVE GEAR OIL SEAL

(a) Using SST and a hammer, drive out the oil seal and dust cover.
SST 09325–20010
HINT: Place the bearing retainer on something soft such as wooden blocks.

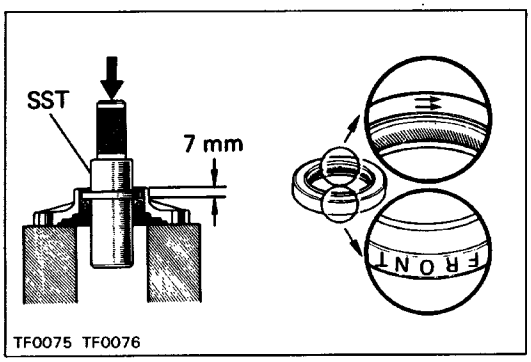

(b) Using SST and a hammer, drive in a .new oil seal to a depth of 7 mm (0.28 in.) from the end.
SST 09325–20010
HINT: Take note of the groove direction and be careful not to interchange this seal with the output shaft oil seal. This oil seal has two arrow marks pointing clockwise and the word FRONT to distinguish it from the output shaft.

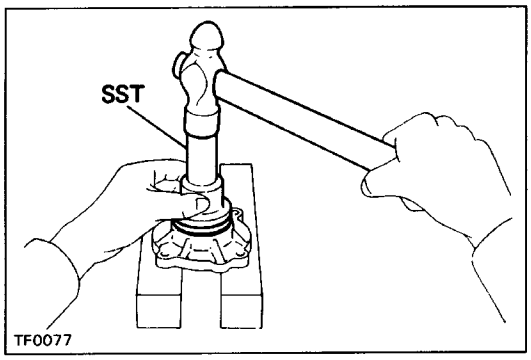

(c) Using SST and a hammer, drive in a new dust cover.
SST 09325–20010

ASSEMBLY OF TRANSFER

(See page TF–7)

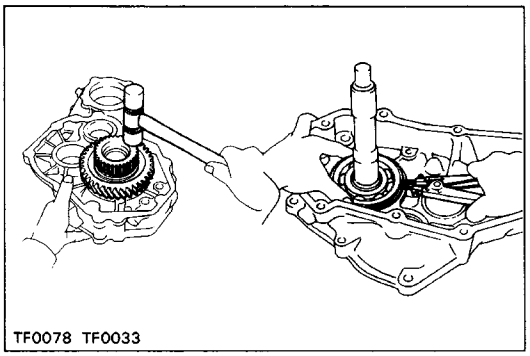

1. INSTALL OUTPUT SHAFT TO FRONT CASE

(a) Using a plastic hammer, install the output shaft to the front case.

HINT: Place the front case on something soft such as wooden blocks.

(b) Using snap ring pliers, install the snap ring.

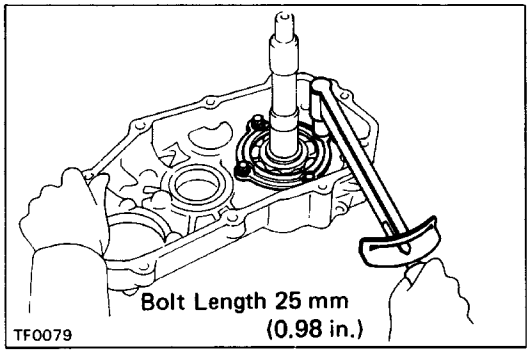

2. INSTALL BEARING RETAINER TO FRONT CASE

(a) Install the bearing retainer with four bolts.

(b) Torque the bolts.

Torque: 18 N–m (185 kgf–cm, 13 ft–lbf)

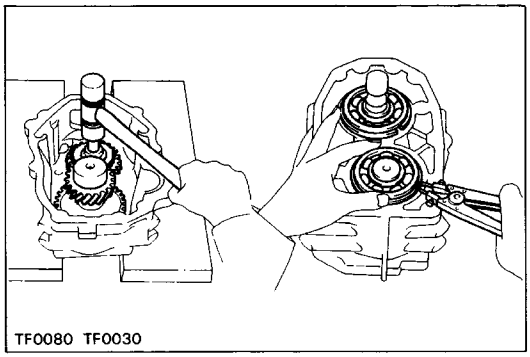

3. INSTALL INPUT GEAR AND COUNTER GEAR TO REDUCTION GEAR CASE

(a) Using a plastic hammer, install the input gear and counter gear to the reduction gear case.

HINT: Place the reduction gear case on something soft such as wooden blocks.

(b) Using snap ring pliers, install the snap rings.

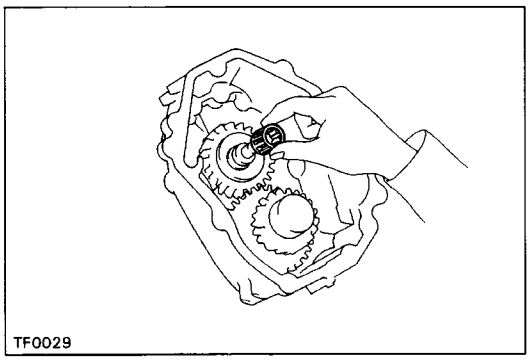

4. INSTALL ROLLER BEARING ON INPUT SHAFT

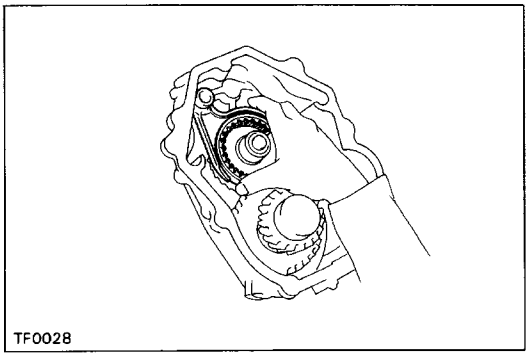

5. INSTALL NO.2 HUB SLEEVE AND NO.2 SHIFT FORK ON INPUT SHAFT

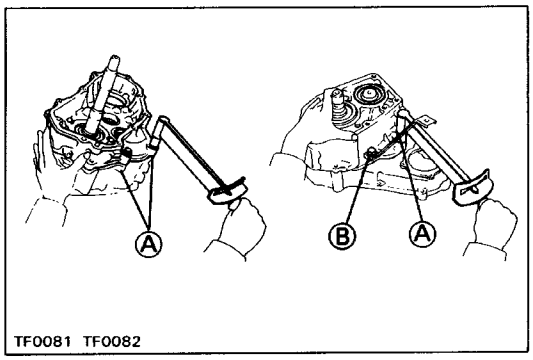

6. INSTALL REDUCTION GEAR CASE WITH NEW GASKET TO FRONT CASE

(a) Place a new gasket on the front case.

(b) Install the reduction gear case together with the in–put gear and counter gear.

(c) Install and torque the bolts as shown in the figure.

Torque:

(A) Bolt length 47 mm (1.85 in.)
39 N–m (400 kgf–cm, 29 ft–lbf)

(B) Bolt length 49 mm (1.93 in.)
39 N–m (400 kgf–cm, 29 ft–lbf)

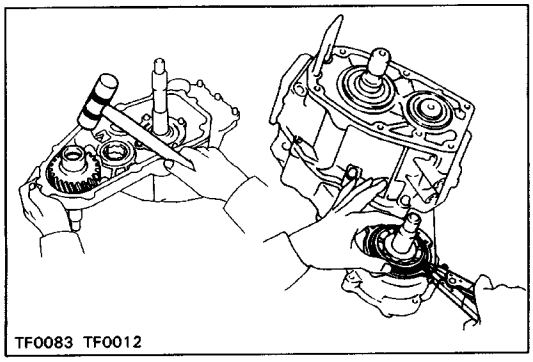

7. INSTALL FRONT DRIVE GEAR

(a) Using a plastic hammer, install the front drive gear.

(b) Using snap ring pliers, install the snap ring.

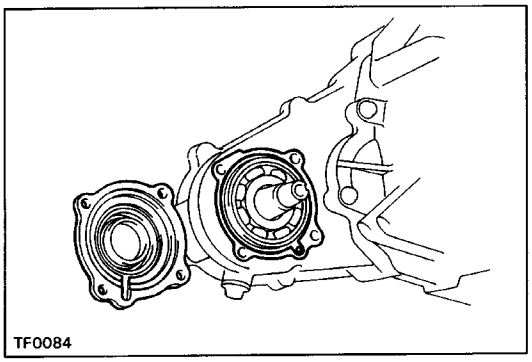

8. INSTALL BEARING RETAINER WITH NEW GASKET

(a) Place a new gasket on the front case.

(b) Apply MP grease to the oil seal.

(c) Install the bearing retainer.

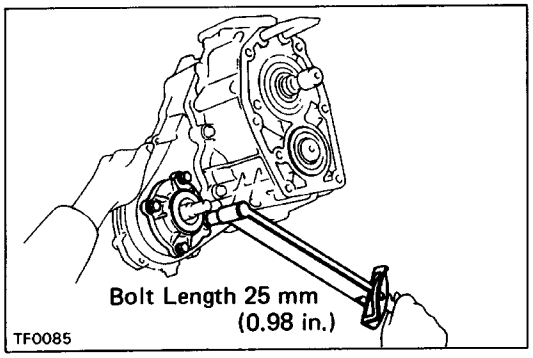

(d) Install and torque the bolts.

Torque: 18 N–m (185 kgf–cm, 13 ft–lbf)

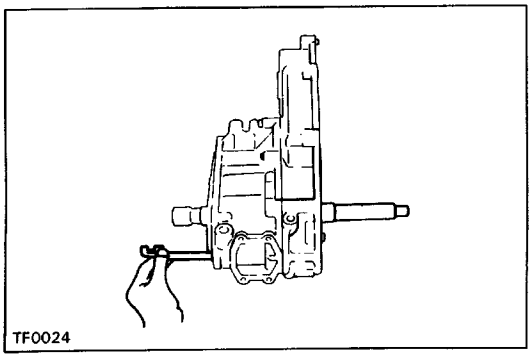

9. INSTALL HIGH AND LOW SHIFT FORK SHAFT

(a) Install the high and low shift fork shaft to the No.2 shift fork.

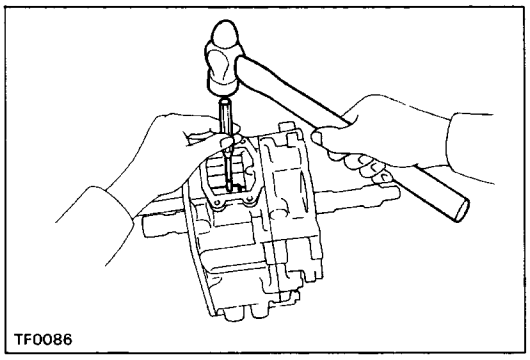

(b) Align the slotted spring hole in the fork with the hole in the shaft.
(c) Using a pin punch and hammer, drive in the slotted spring pin.

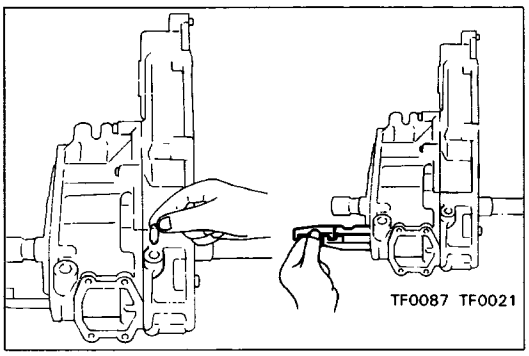

10. INSTALL INTERLOCK PIN AND FRONT DRIVE SHIFT FORK SHAFT
(a) Install the interlock pin.
(b) Install the front drive shift fork shaft with the two grooves facing outward.

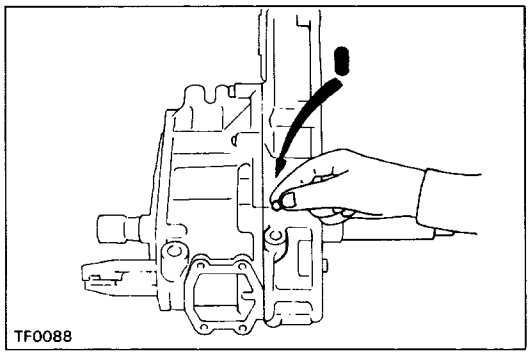

11. INSTALL TWO BALLS, SPRINGS AND PLUGS
(a) Install the ball and spring.

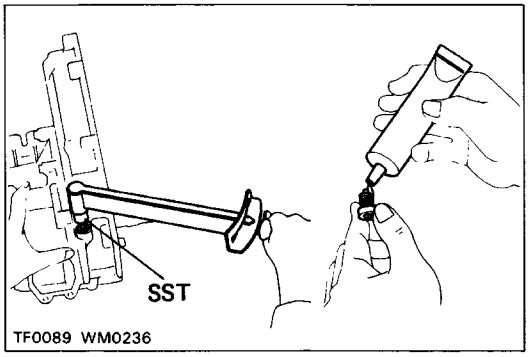

(b) Apply liquid sealer to the plug threads.
Sealant: Part No. 08833–00080, THREE BOND 1344, LOCTITE 242 or equivalent
(c) Using SST, install and torque the plug.
SST 09313–30021
Torque: 12 N–m (120 kgf–cm, 9 ft–lbf)
(d) Install the ball, spring and plug to the opposite side.

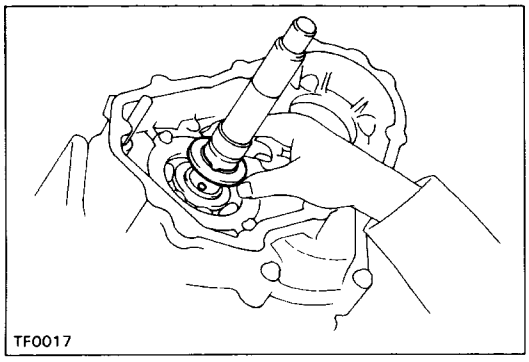

12. INSTALL LOCKING BALL AND NO.2 SPACER

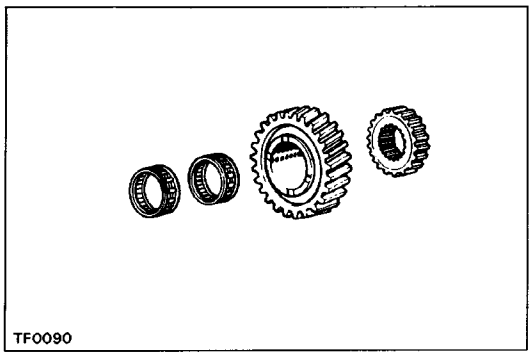
TF0090

13. INSTALL NEEDLE ROLLER BEARINGS, TRANSFER LOWER GEAR AND CLUTCH HUB

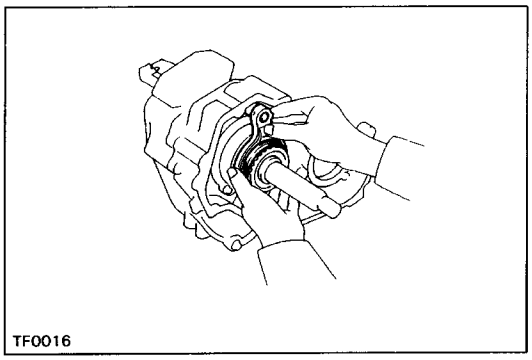
TF0016

14. INSTALL NO. 1 SHIFT FORK AND HUB SLEEVE

(a) Install the No.1 shift fork together with the hub sleeve to the front drive shift fork shaft.

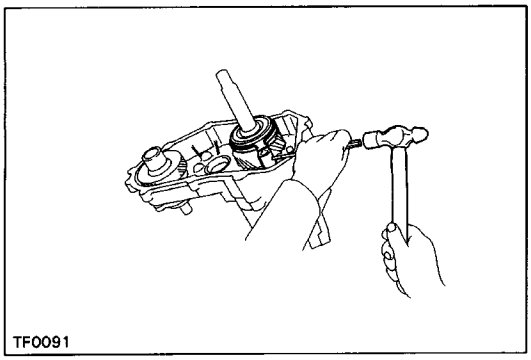
TF0091

(b) Align the slotted pin hole in the fork with the hole in the shaft.

(c) Using a pin punch and hammer, install the slotted spring pin.

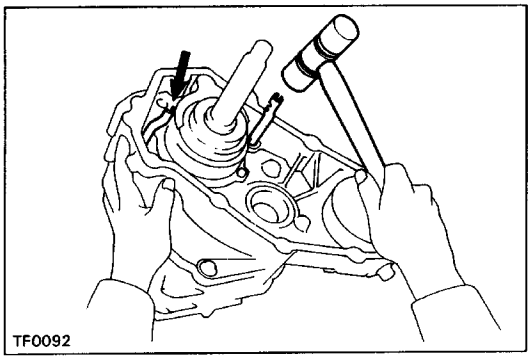
TF0092

15. INSTALL OIL PIPES

Install the two oil pipes with the cutout side positioned upward.

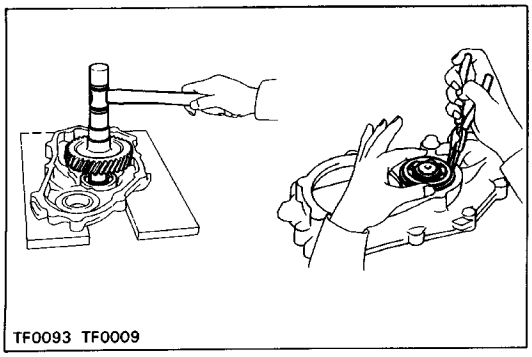
TF0093 TF0009

16. INSTALL IDLER GEAR TO REAR CASE

(a) Using a plastic hammer, install the idler gear to the rear case.

HINT: Place the rear case on something soft such as wooden blocks.

(b) Using snap ring pliers, install the snap ring.

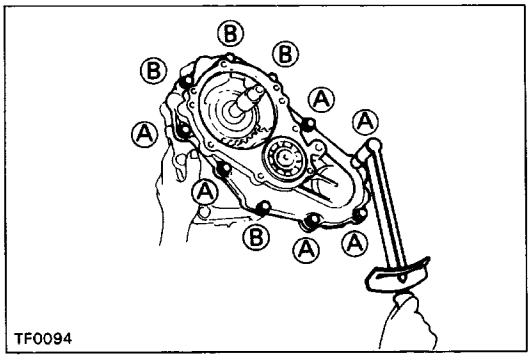

17. INSTALL REAR CASE WITH NEW GASKET

(a) Place a new gasket on the front case.
(b) Install the rear case together with the idler gear.
(c) Install and torque the bolts as shown in the figure.

Torque:
(A) Bolt length 47 mm (1.85 in.)
Ⓑ 39 N–m (400 kgf–cm, 29 ft–lbf)
(B) Bolt length 112 mm (4.41 in.)
39 N–m (400 kgf–cm, 29 ft–lbf)

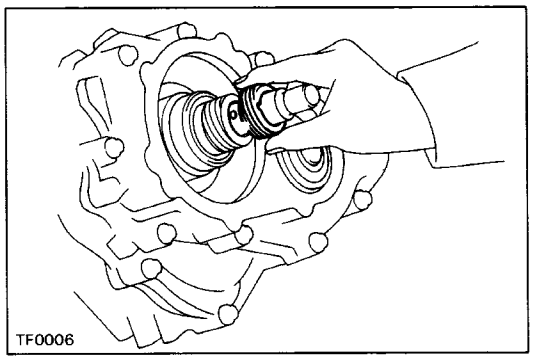

18. INSTALL BEARING, OIL PUMP SCREW, LOCKING BALL AND SPEEDOMETER DRIVE GEAR

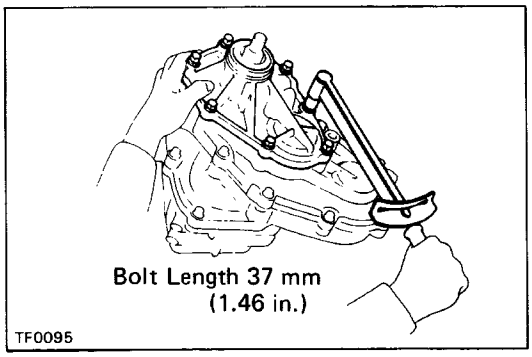

19. INSTALL EXTENSION HOUSING WITH NEW GASKET

(a) Place a new gasket to the rear case.
(b) Apply MP grease to the two oil seals.
(c) Install the extension housing with seven bolts.
Torque the bolts.
Torque: 39 N–m (400 kgf–cm, 29 ft–lbf)

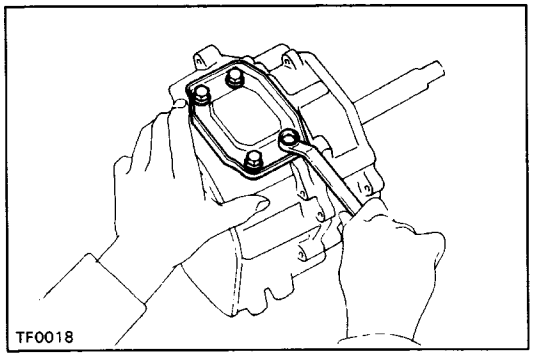

20. INSTALL TRANSFER CASE COVER WITH NEW GASKET

(a) Place a new gasket to the transfer case cover.
(b) Install and torque the four bolts.
Torque: 8.8 N–m (90 kgf–cm, 78 in.lbf)

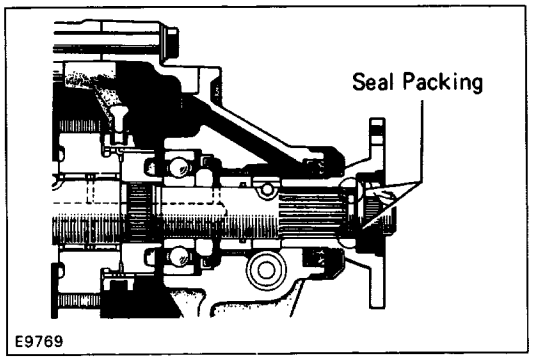

21. INSTALL REAR COMPANION FLANGE

(a) Install the companion flange to the output shaft.
(b) Apply seal packing to the output shaft and companion flange as shown.
Seal packing: Part No. 08826–00090 THREE BOND 1281 or equivalent

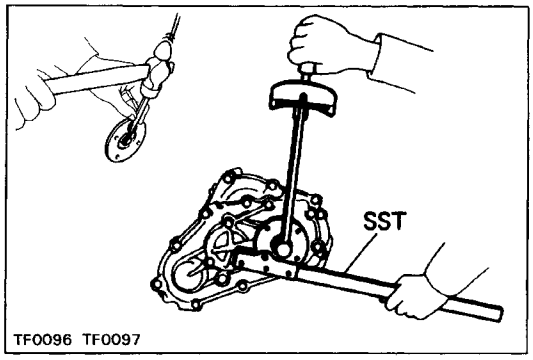

(c) Using SST to hold the flange, install the washer and nut. Torque the nut.
SST 09330–00021
Torque: 123 N–m (1,250 kgf–cm, 90 ft–lbf)
(d) Stake the nut.

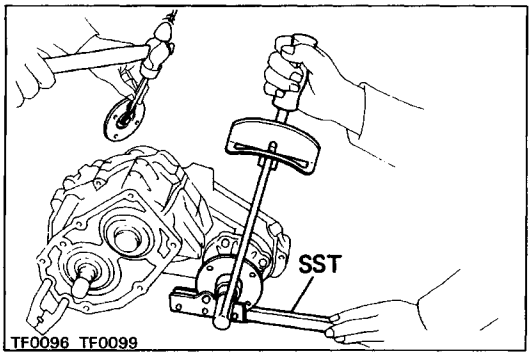

22. INSTALL FRONT COMPANION FLANGE
(a) Install the companion flange to the front drive gear.
(b) Using SST to hold the flange, install the washer and nut. Torque the nut.
SST 09330–00021
Torque: 123 N–m (1,250 kgf–cm, 90 ft–lbf)
(c) Stake the nut.

23. INSTALL TRANSFER INDICATOR SWITCH WITH WASHER
Torque: 34 N–m (350 kgf–cm, 25 ft–lbf)
24. INSTALL NO. 1 SPEED SENSOR
(a) Install the No. 1 speed sensor.
(b) Install and torque the bolt.
Torque: 11 N–m (115 kgf–cm, 8 ft–lbf)

(VF1A TYPE TRANSFER) COMPONENTS

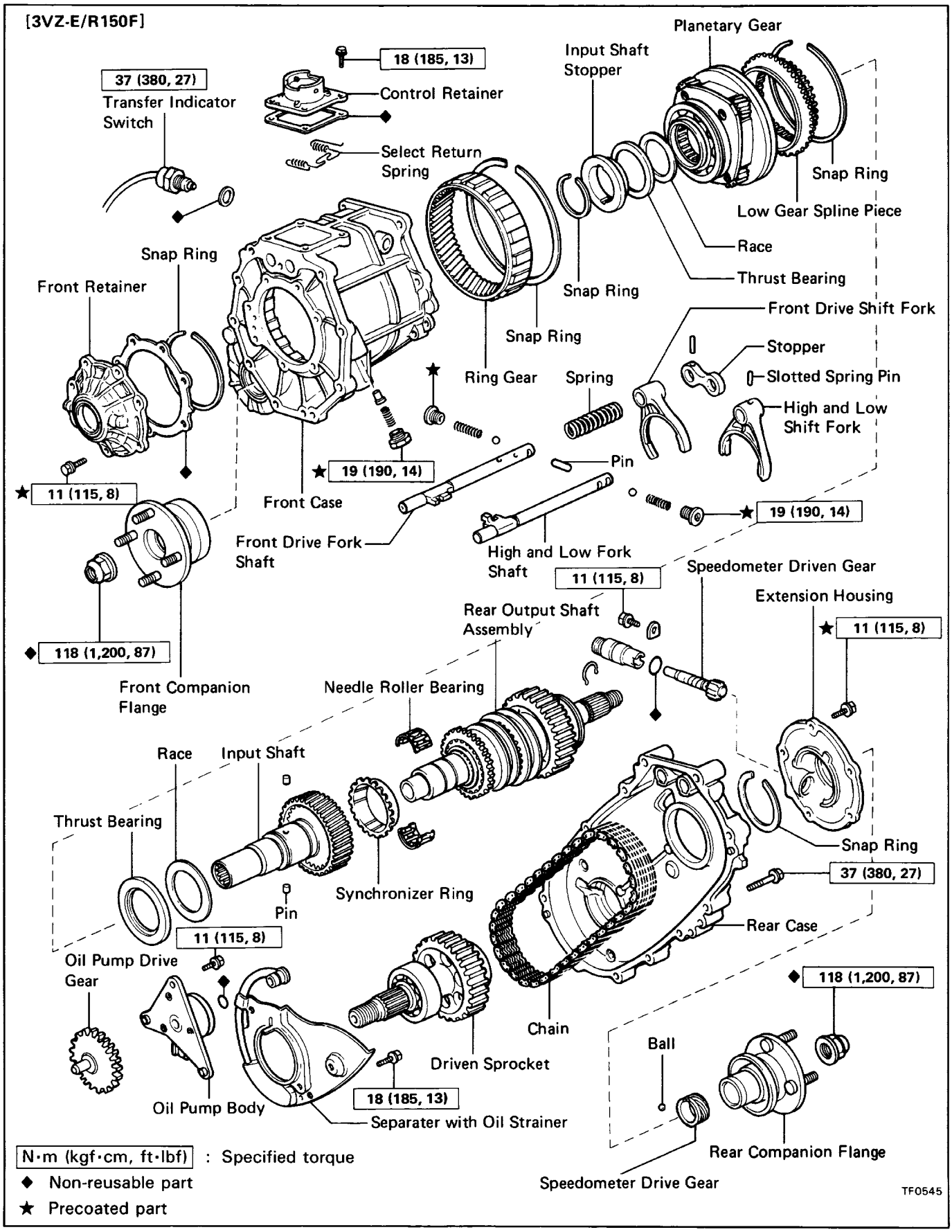

N·m (kgf·cm, ft·lbf) : Specified torque
◆ Non-reusable part
★ Precoated part

COMPONENTS (Cont'd)

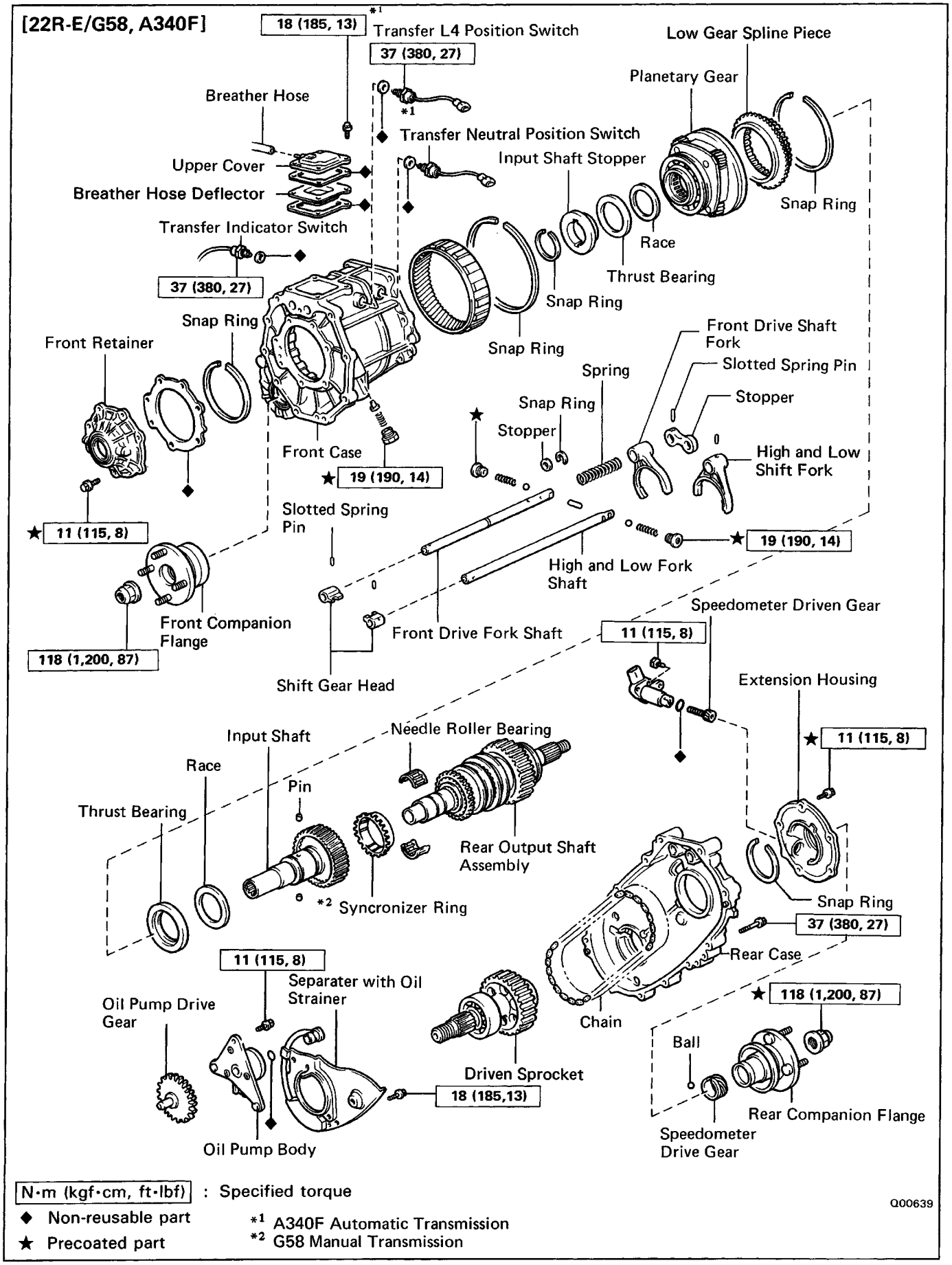

DISASSEMBLY OF TRANSFER

(See pages TF–32 and 33)

1. REMOVE SPEEDOMETER DRIVEN GEAR

2. REMOVE TRANSFER INDICATOR SWITCH

3. (22R–E/A340F)
REMOVE TRANSFER L4 POSITION SWITCH

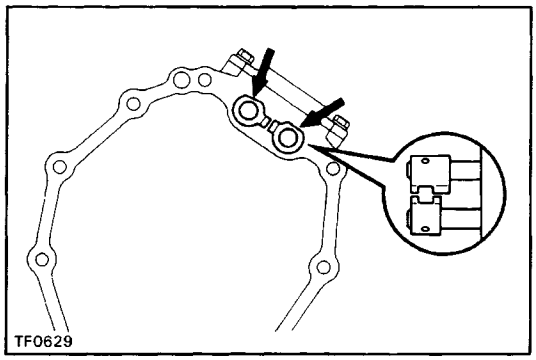

4. (22R–E/G58, A340F)
REMOVE SHIFT GEAR HEAD NO. 1 AND NO.2

(a) Using a pin punch and hammer, drive out the two slotted spring pins.

(b) Remove two shift gear heads.

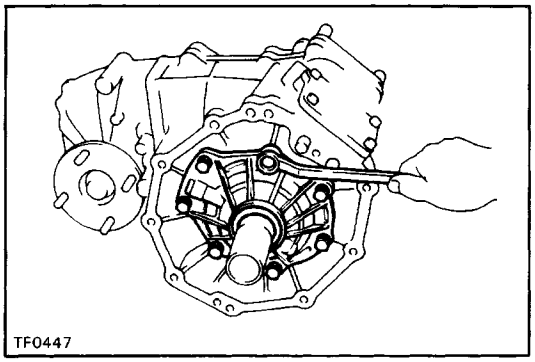

5. REMOVE FRONT RETAINER

Remove the seven bolts and the front retainer.

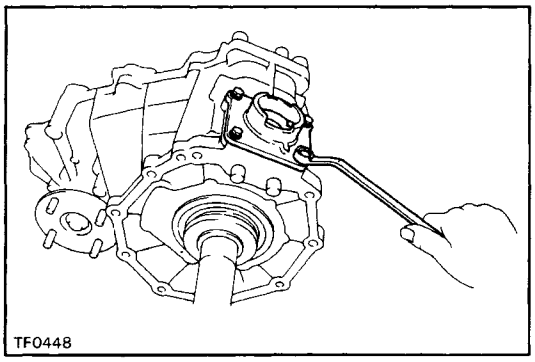

6.–1 (3VZ–E/R150F)
REMOVE CONTROL RETAINER

(a) Remove the four bolts and the control retainer.

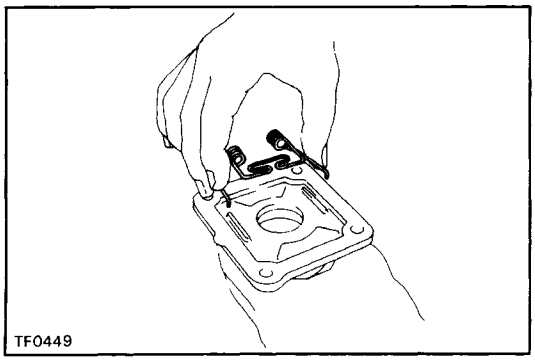

(b) Remove the select return spring from the retainer.

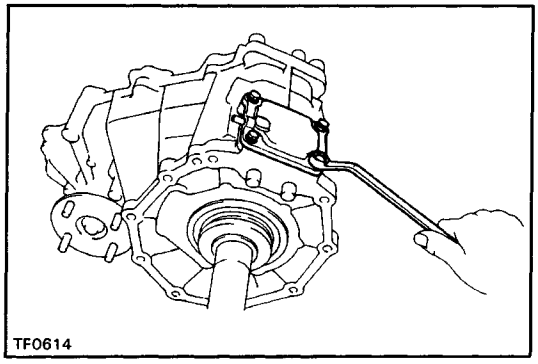

6.–2 (22R–E/G58, A340F)
REMOVE UPPER COVER AND OIL DEFLECTOR
Remove the four bolts and the upper cover and oil deflec–tor.

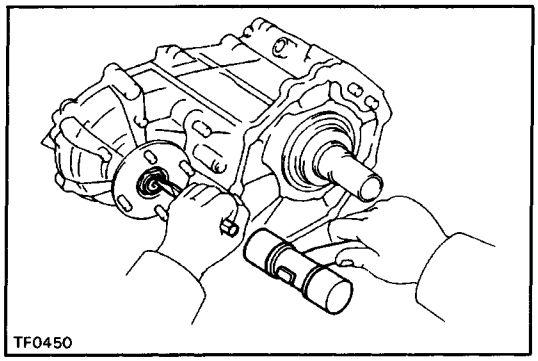

7. REMOVE FRONT COMPANION FLANGE
(a) Using a hammer and chisel, loosen the staked part of the nut.

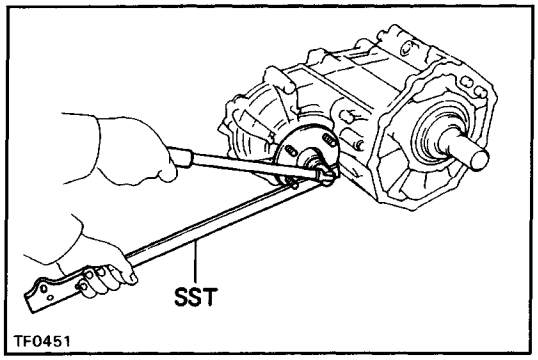

(b) Using SST to hold the flange, remove the compan–ion flange lock nut.
SST 09330–00021 –

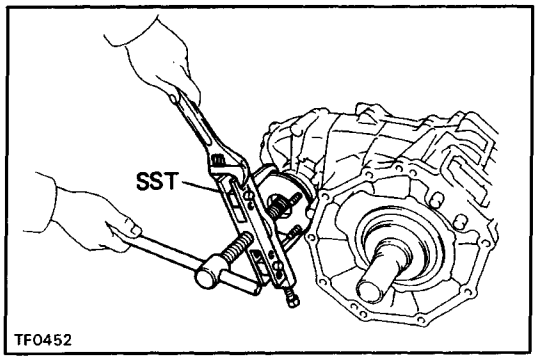

(c) Using SST, remove the companion flange.
SST 09950–20017

8. REMOVE REAR COMPANION FLANGE
Remove the rear companion flange in the same way as the front companion flange.

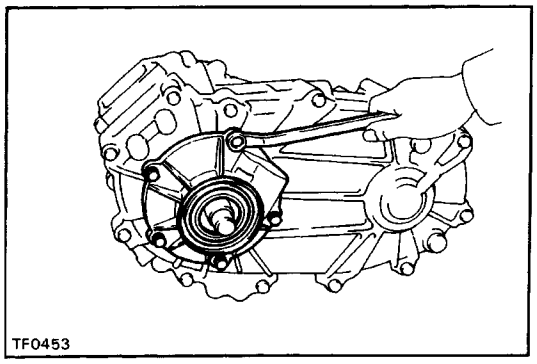

9. REMOVE EXTENSION HOUSING
(a) Remove the five bolts.
(b) Using a plastic hammer, tap the extension housing and remove it.

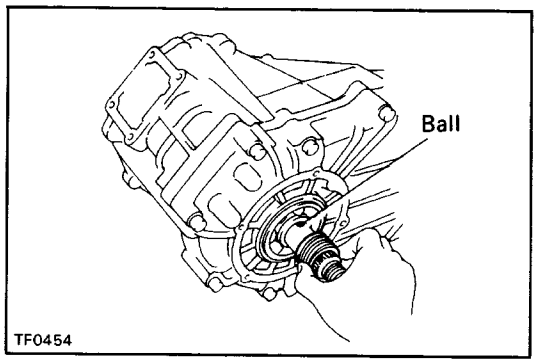

10. REMOVE SPEEDOMETER DRIVE GEAR

(a) Remove the speedometer drive gear.

(b) Using a magnetic finger, remove the ball from the rear output shaft.

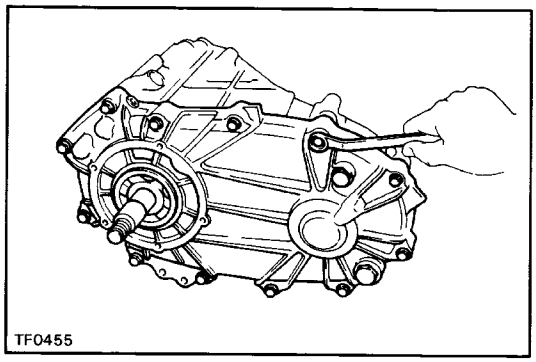

11. SEPARATE FRONT CASE AND REAR CASE

(a) Remove the twelve bolts.

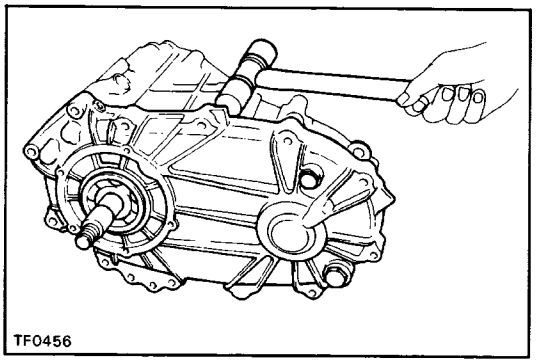

(b) Using a plastic hammer, tap the rear case and separate the front case and rear case.

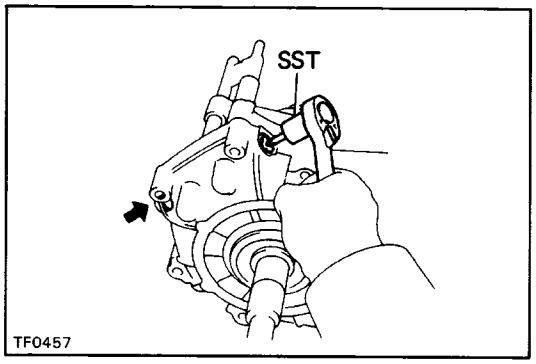

12. REMOVE STRAIGHT SCREW PLUGS, SPRINGS AND LOCKING BALLS

(a) Using SST, remove the two screws.

SST 09313–30021

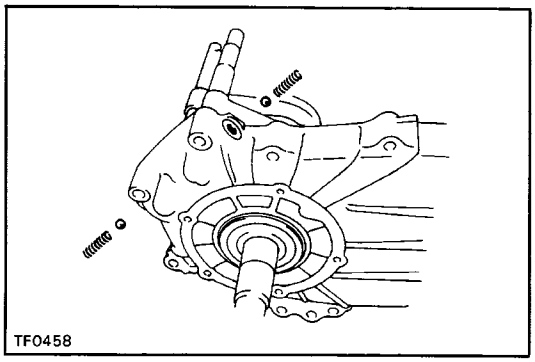

(b) Using a magnetic finger, remove the spring and ball from the both holes.

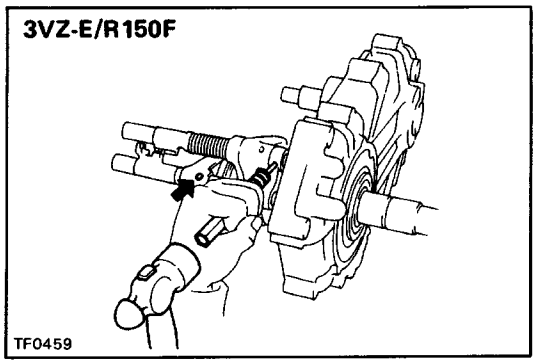

13. REMOVE FRONT DRIVE FORK SHAFT, FORK AND SPRING

(a) Using a pin punch and hammer, drive out the two slotted spring pins.

HINT: When the pin is removed from the front drive fork shaft, the shaft will spring loose if the pin punch is re–moved, so keep the pin punch inserted in the shaft hole.

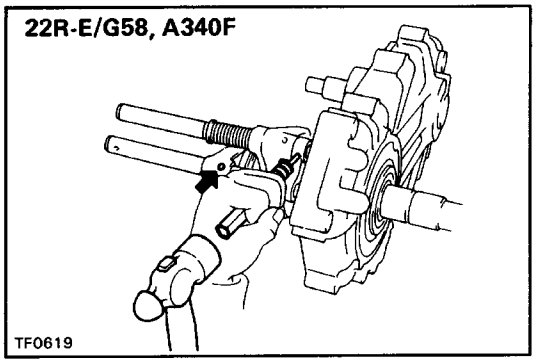

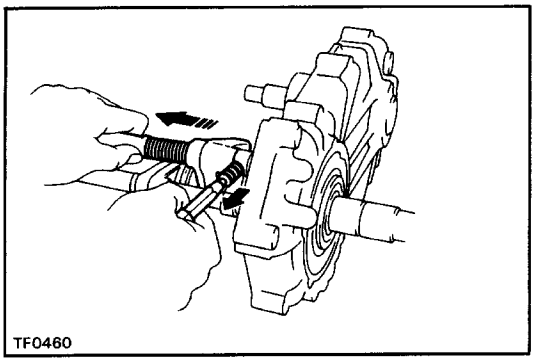

(b) Hold the front drive fork shaft in place by hand, when removing the pin punch.

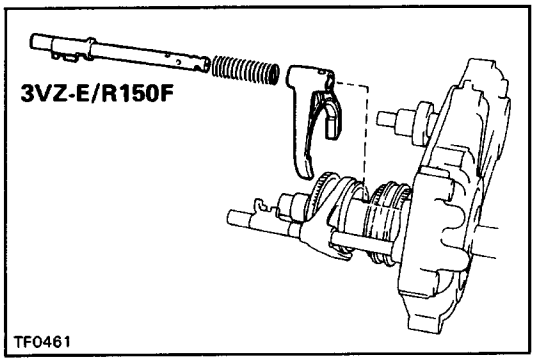

(c) Remove the front drive fork shaft, spring and fork.

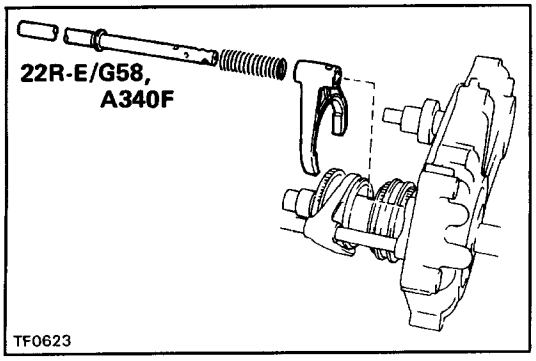

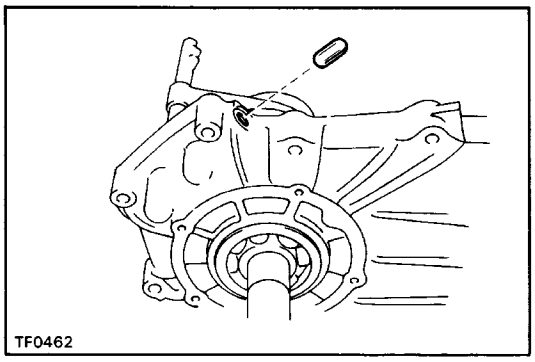

(d) Using a magnetic finger, remove the straight pin.

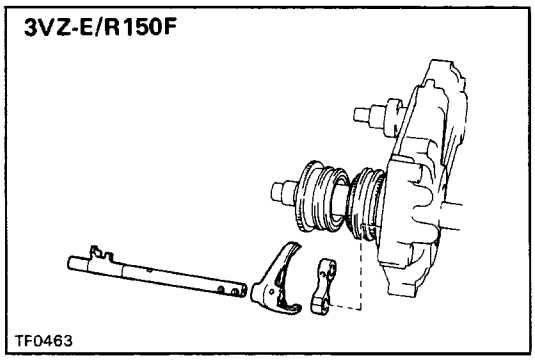

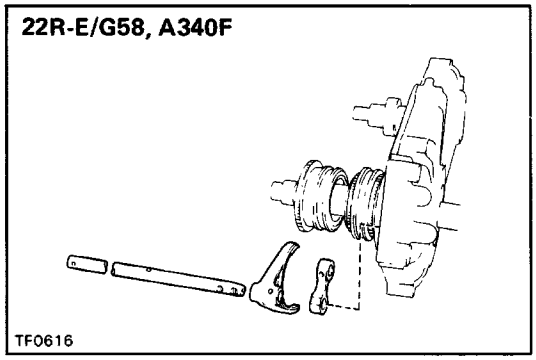

14. REMOVE HIGH AND LOW FORK SHAFT, FORK AND STOPPER

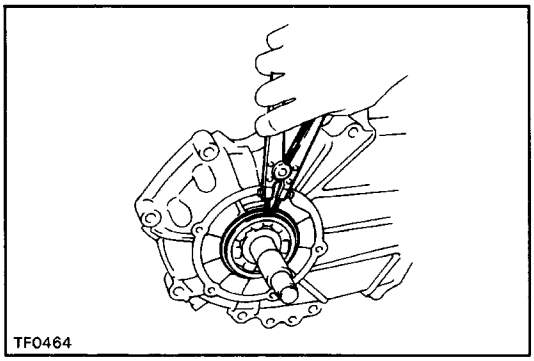

15. REMOVE REAR OUTPUT SHAFT, DRIVEN SPROCKET AND CHAIN

(a) Using snap ring pliers, remove the snap ring.

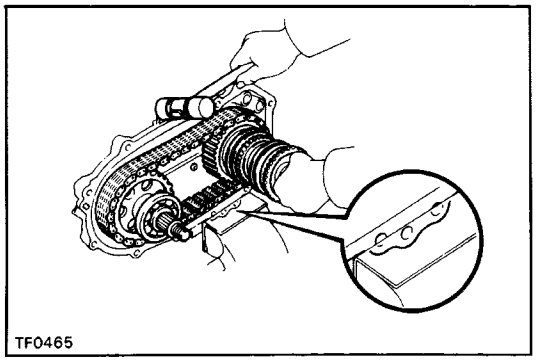

(b) Mount the rear case in the vise.

NOTICE: Be careful not to damage the sealing surface.

(c) Using a plastic hammer, tap the rear case with pull–ing the rear output shaft and driven sprocket.

(d) Remove the chain.

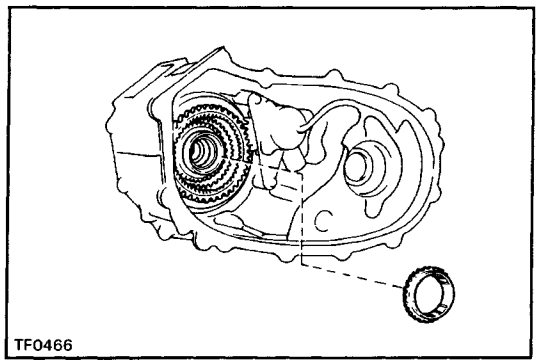

16. (13150F, G58)
REMOVE SYNCHRONIZER RING FROM INPUT SHAFT

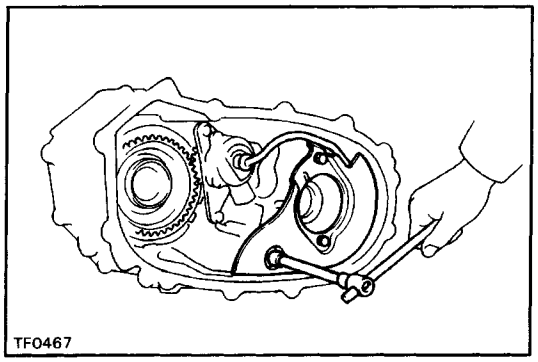

17. REMOVE SEPARATER WITH OIL STRAINER
(a) Remove the three bolts and the separater with the oil strainer.
(b) Remove the 0–ring from the oil strainer pipe.

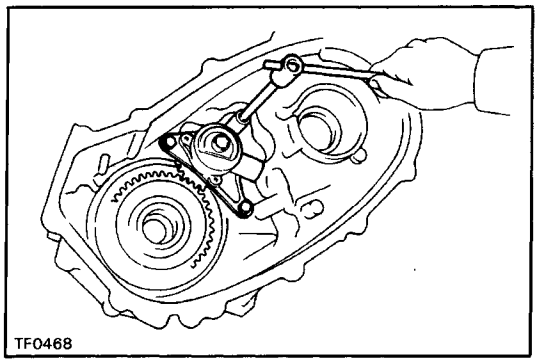

18. REMOVE OIL PUMP BODY ASSEMBLY
Remove the three bolts and the oil pump body assembly.

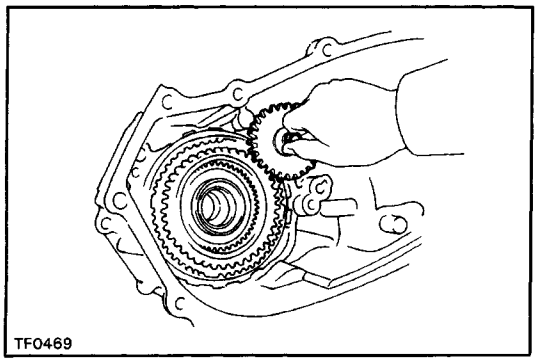

19. REMOVE OIL PUMP DRIVE GEAR

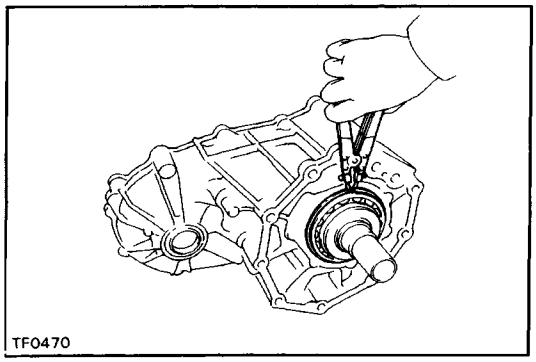

20. REMOVE PLANETARY GEAR ASSEMBLY WITH INPUT SHAFT
(a) Using snap ring pliers, remove the snap ring.

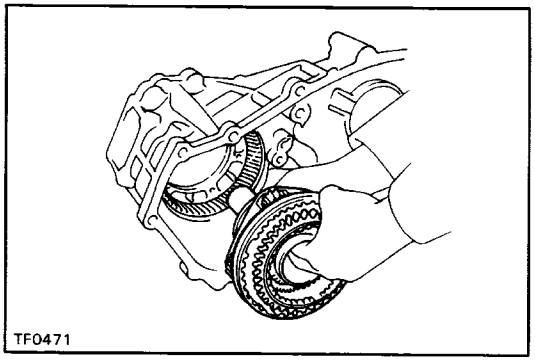

(b) Pull out the planetary gear assembly with the input shaft.

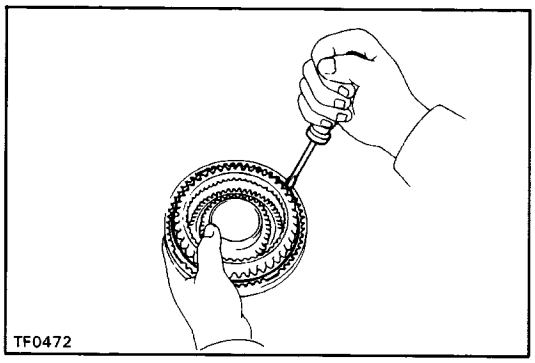

21. REMOVE LOW GEAR SPLINE PIECE

(a) Using a screwdriver, remove the snap ring.

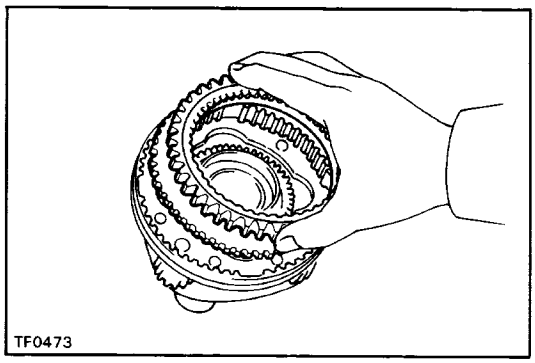

(b) Remove the low gear spline piece.

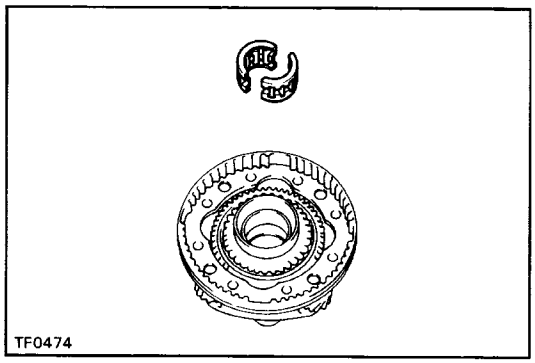

22. REMOVE NEEDLE ROLLER BEARING FROM INPUT SHAFT

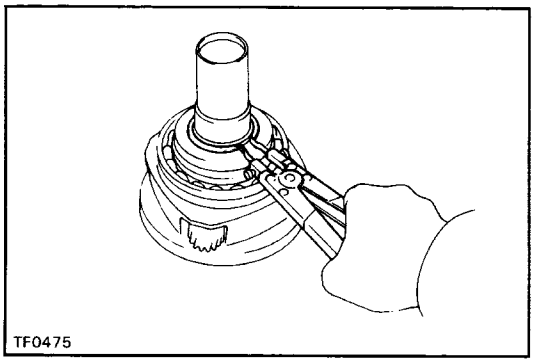

23. REMOVE INPUT SHAFT STOPPER AND THRUST BEARING

(a) Using snap ring pliers, remove the snap ring.

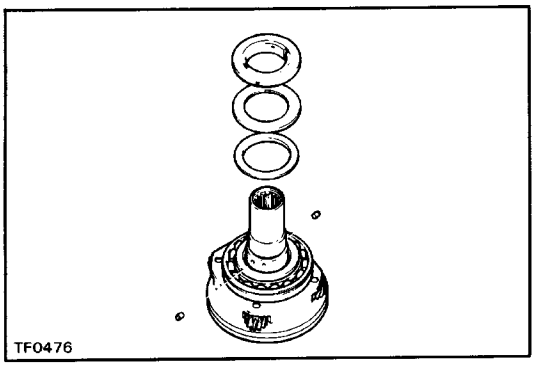

(b) Remove the input shaft stopper, thrust bearing, race and the two pins.

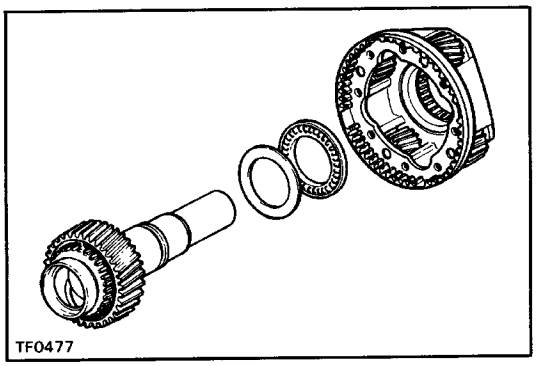

24. REMOVE INPUT SHAFT, THRUST BEARING AND RACE

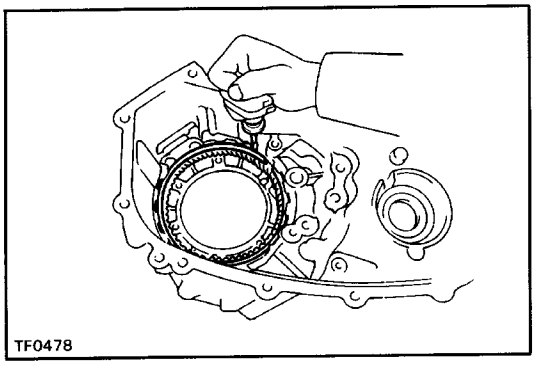

25. REMOVE PLANETARY RING GEAR

(a) Using a screwdriver, remove the snap ring.

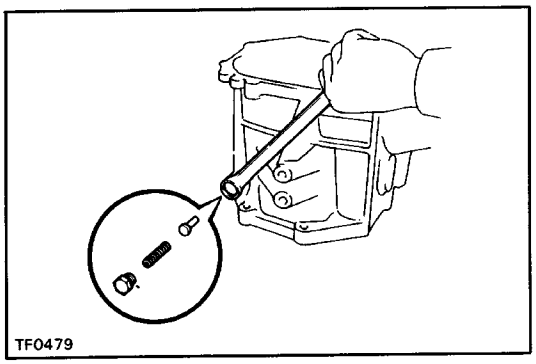

(b) Remove the plug, spring and pin.

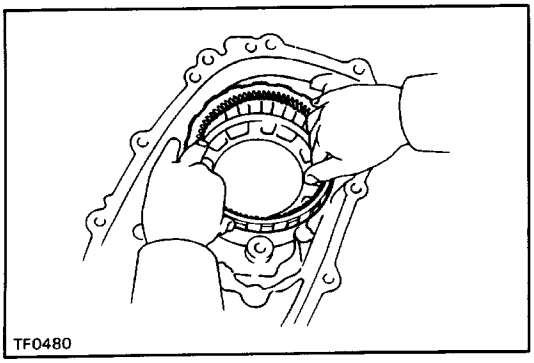

(c) Remove the planetary ring gear.

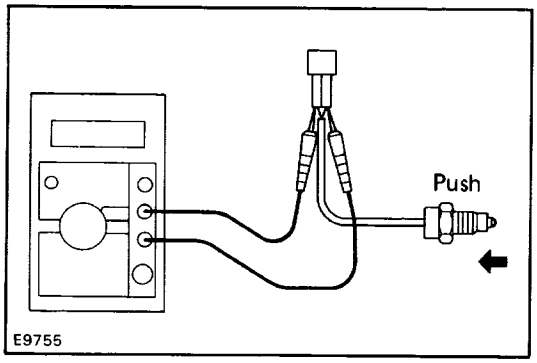

26. INSPECT TRANSFER INDICATOR SWITCH

Check that there is continuity between terminals as shown.

Switch Position	Specified
Push	Continuity
Free	No continuity

If operation is not as specified, replace the switch.

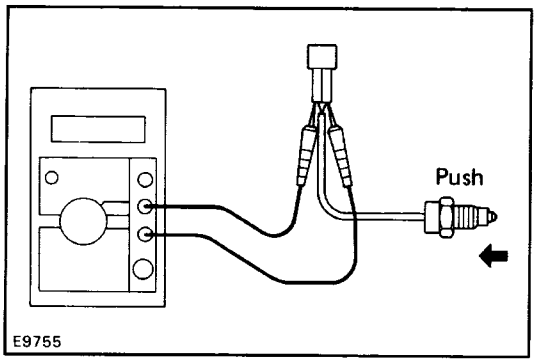

27. (22R–E/A340F)
INSPECT TRANSFER L4 AND NEUTRAL POSITION SWITCH

Check that there is continuity between terminals as shown.

Switch Position	Specified
Push	Continuity
Free	No continuity

If operation is not as specified, replace the switch.

COMPONENT PARTS
Oil Pump Body
COMPONENTS

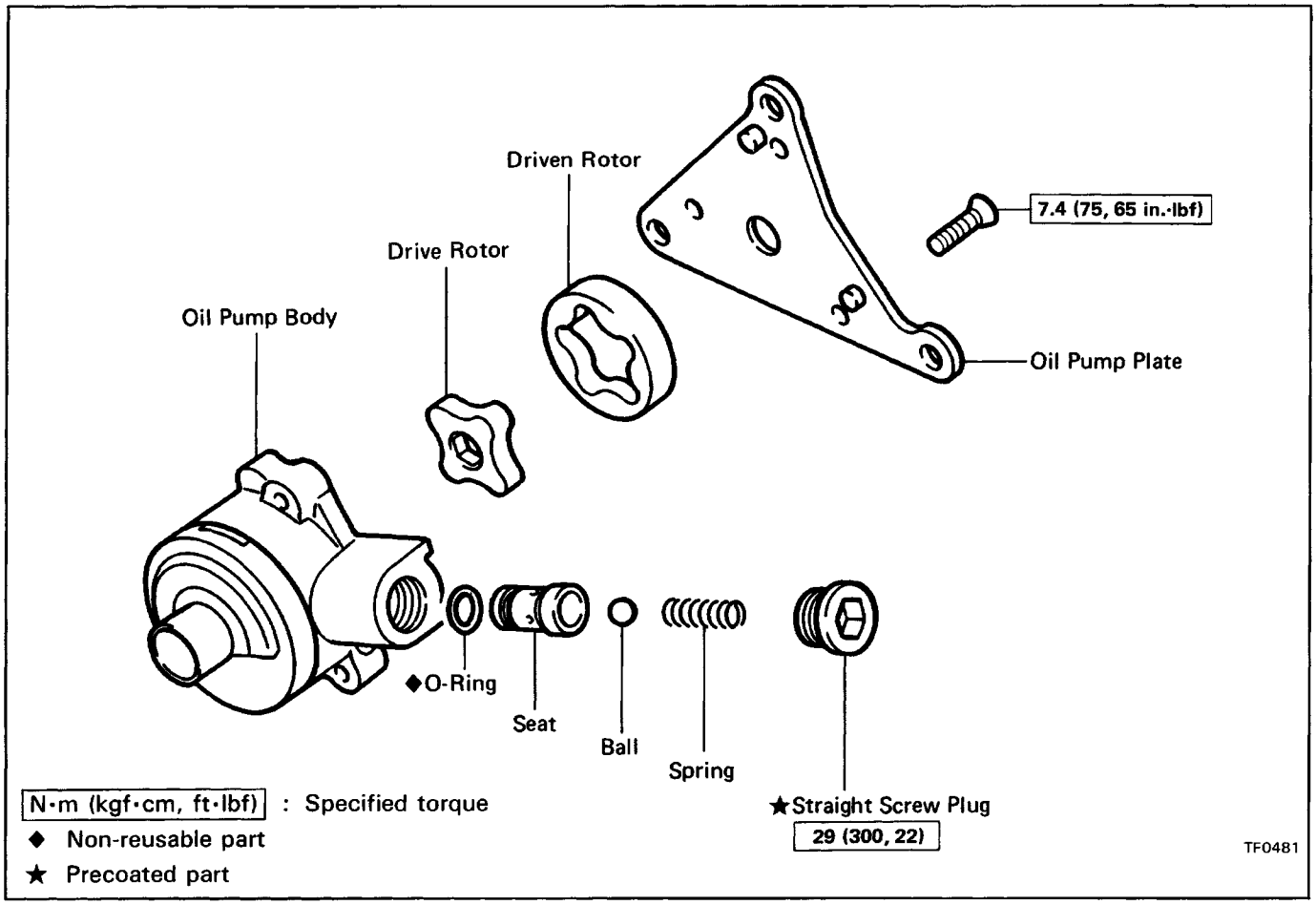

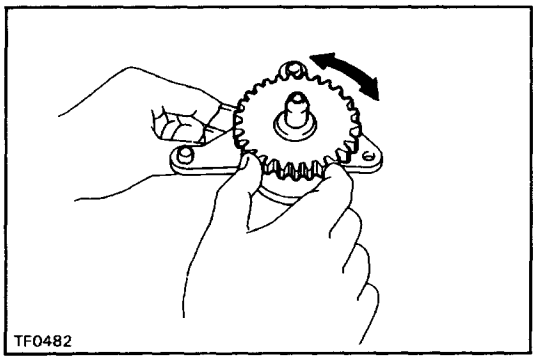

DISASSEMBLY OF OIL PUMP BODY

1. CHECK OPERATION OF OIL PUMP

Install the oil pump drive gear to the drive rotor, check that the drive rotor turns smoothly.

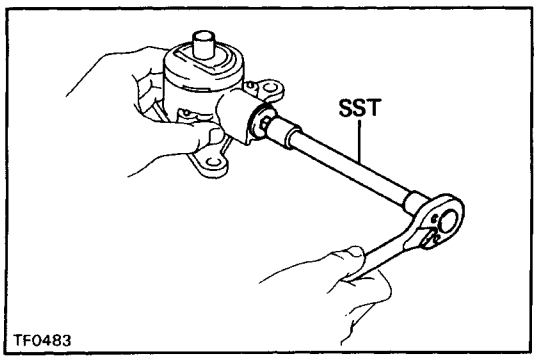

2. REMOVE STRAIGHT SCREW PLUG, SPRING, BALL AND SEAT

(a) Using SST, remove the straight screw plug.
SST 09043–38100

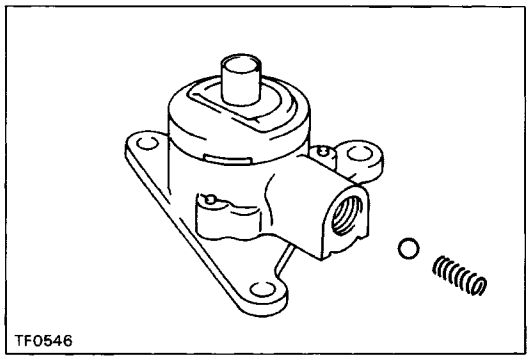

(b) Using a magnetic finger, remove the spring and ball.

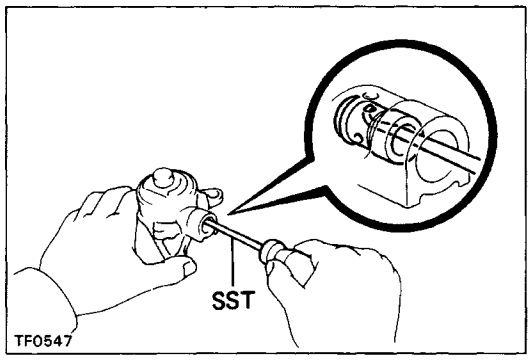

(c) Using SST, pull out the seat.
SST 09921–00010
(d) Remove the O–ring from the seat.

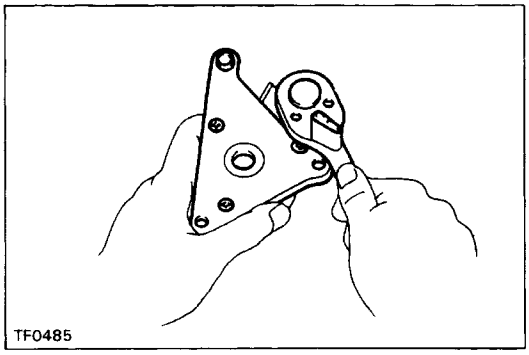

3. REMOVE OIL PUMP PLATE
(a) Using a torx socket wrench, unscrew the three torx screws.
(Torx socket wrench T30 09042–00010)
(b) Remove the oil pump plate.
4. REMOVE DRIVE ROTOR AND DRIVEN ROTOR

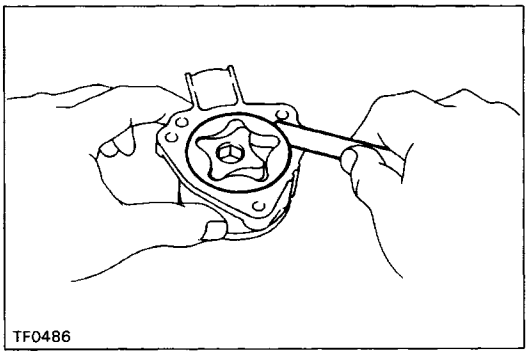

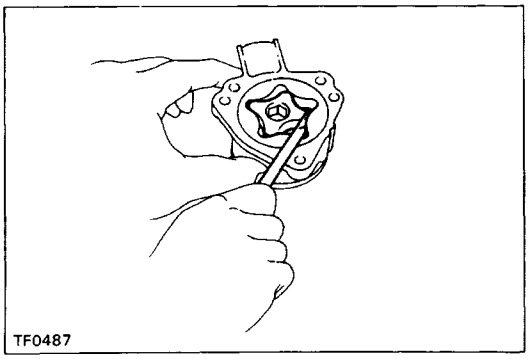

INSPECTION OF OIL PUMP BODY

1. CHECK BODY CLEARANCE OF DRIVEN ROTOR
Push the driven rotor to one side of the body.
Using a feeler gauge, measure the clearance.
Standard clearance: 0.10 – 0.16 mm
(0.0039 – 0.0063 in.)
Maximum clearance: 0.16 mm (0.0063 in.)
If the clearance exceeds the limit, replace the drive rotor, driven rotor or pump body.

2. CHECK TIP CLEARANCE OF BOTH ROTORS
Using a feeler gauge, measure the clearance between both rotor tips.
Standard clearance: 0.08 – 0.16 mm
(0.0031 – 0.0063 in.)
Maximum clearance: 0.16 mm (0.00631n.)
If the clearance exceeds the limit, replace the drive rotor, driven rotor or pump body.

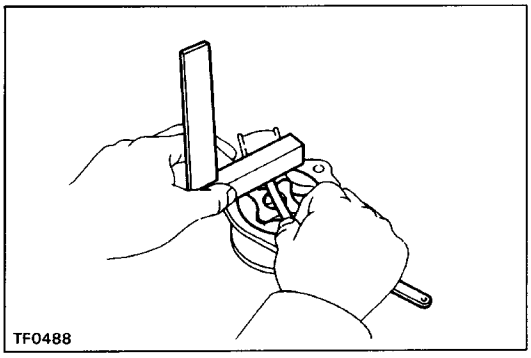

3. CHECK SIDE CLEARANCE OF BOTH ROTORS

Using a steel straight edge and feeler gauge, measure the clearance between the rotors and straight edge.
Standard clearance: 0.03 – 0.08 mm (0.0012 – 0.0031 in.)
Maximum clearance: 0.08 mm (0.0031 in.)
If the clearance exceeds the limit, replace the drive rotor, driven rotor or pump body.

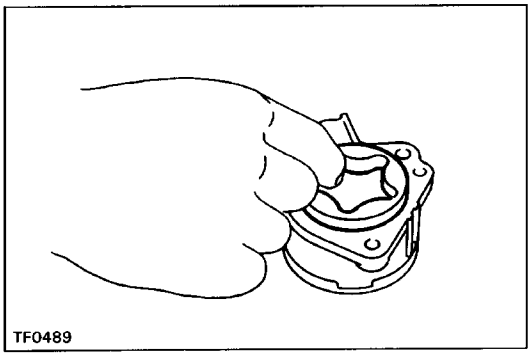

ASSEMBLY OF OIL PUMP BODY

1. INSTALL OIL PUMP DRIVE ROTOR AND DRIVEN ROTOR

(a) Apply gear oil to the both rotors.
(b) Install the driven rotor.

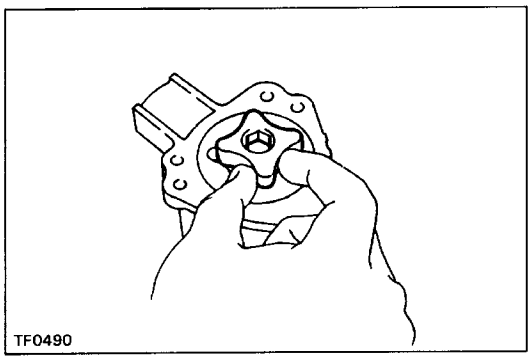

(c) Install the drive rotor.

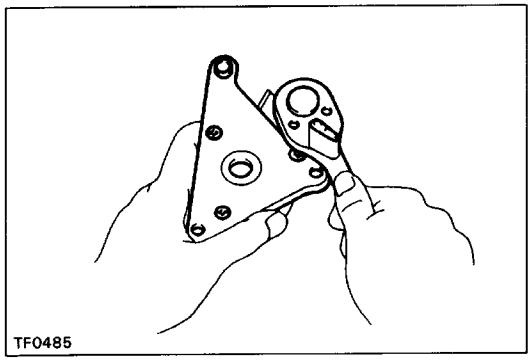

2. INSTALL OIL PUMP PLATE

(a) Install the oil pump plate.
(b) Using a torx socket wrench, tighten the three torx screws.
(Torx socket wrench T30 09042–00010)
Torque: 7.4 N–m (75 kgf–cm, 65 in.–lbf)

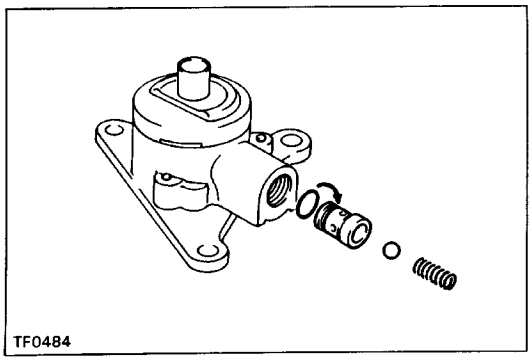

3. INSTALL SEAT, BALL, SPRING AND STRAIGHT SCREW PLUG

(a) Install a new O–ring to the seat.
(b) Install the seat, ball and spring.
HINT: When installing the seat, push the seat until it touches the bottom of the hole in the body.

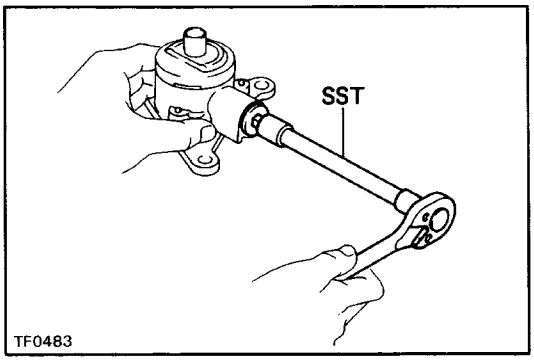

(c) Apply liquid sealer to the plug.
Sealant: Part No. 08833–00080, THREE BOND 1344, LOCTITE 242 or equivalent
(d) Using SST, torque the plug.
SST 09043–38100
Torque: 29 N–m (300 kgf–cm, 22 ft–lbf)

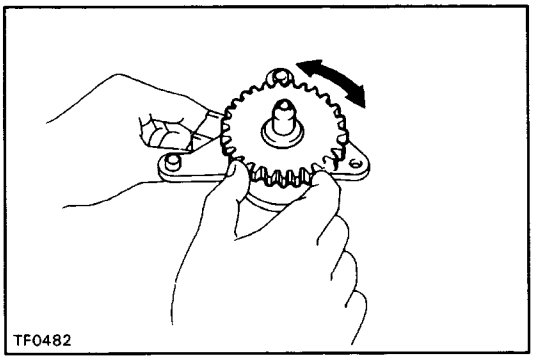

4. CHECK OPERATION OF OIL PUMP
Install the oil pump drive gear to the drive rotor, check that the drive rotor turns smoothly.

Driven Sprocket

COMPONENTS

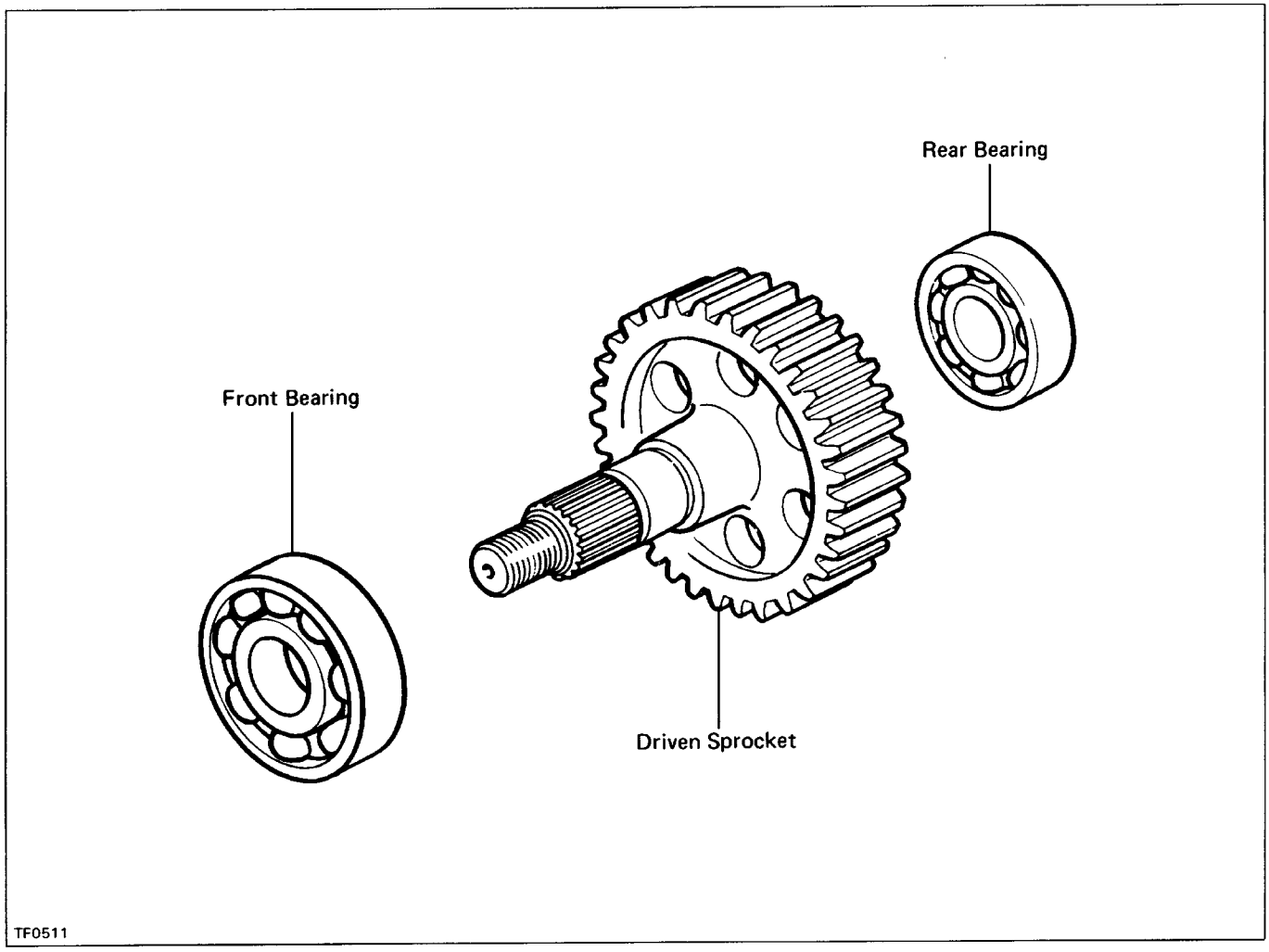

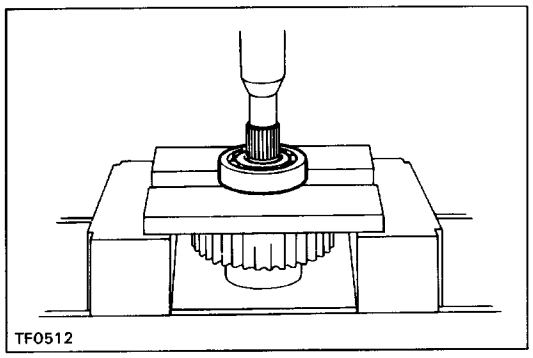

DISASSEMBLY OF DRIVEN SPROCKET

1. REMOVE FRONT BEARING

Using a press, remove the front bearing.

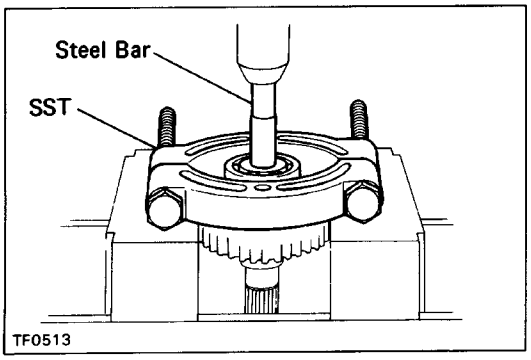

2. REMOVE REAR BEARING

Using SST and a press, remove the rear bearing.

SST 09950–00020

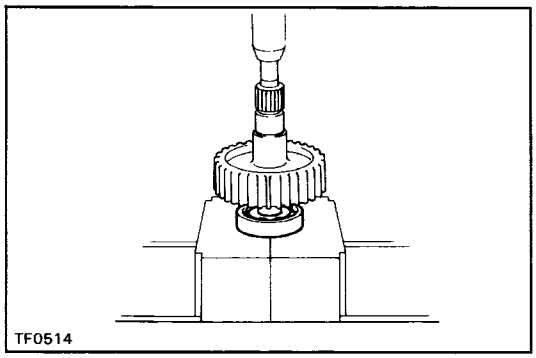

ASSEMBLY OF DRIVEN SPROCKET

1. INSTALL REAR BEARING

Using a press, install the rear bearing.

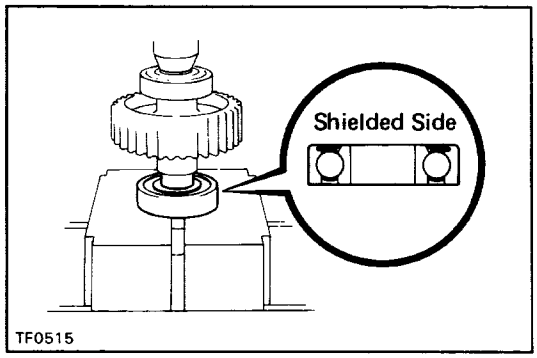

2. INSTALL FRONT BEARING

Using a press, install the front bearing.
HINT: Make sure to install the bearing in the correct direction.

Rear Output Shaft Assembly

COMPONENTS

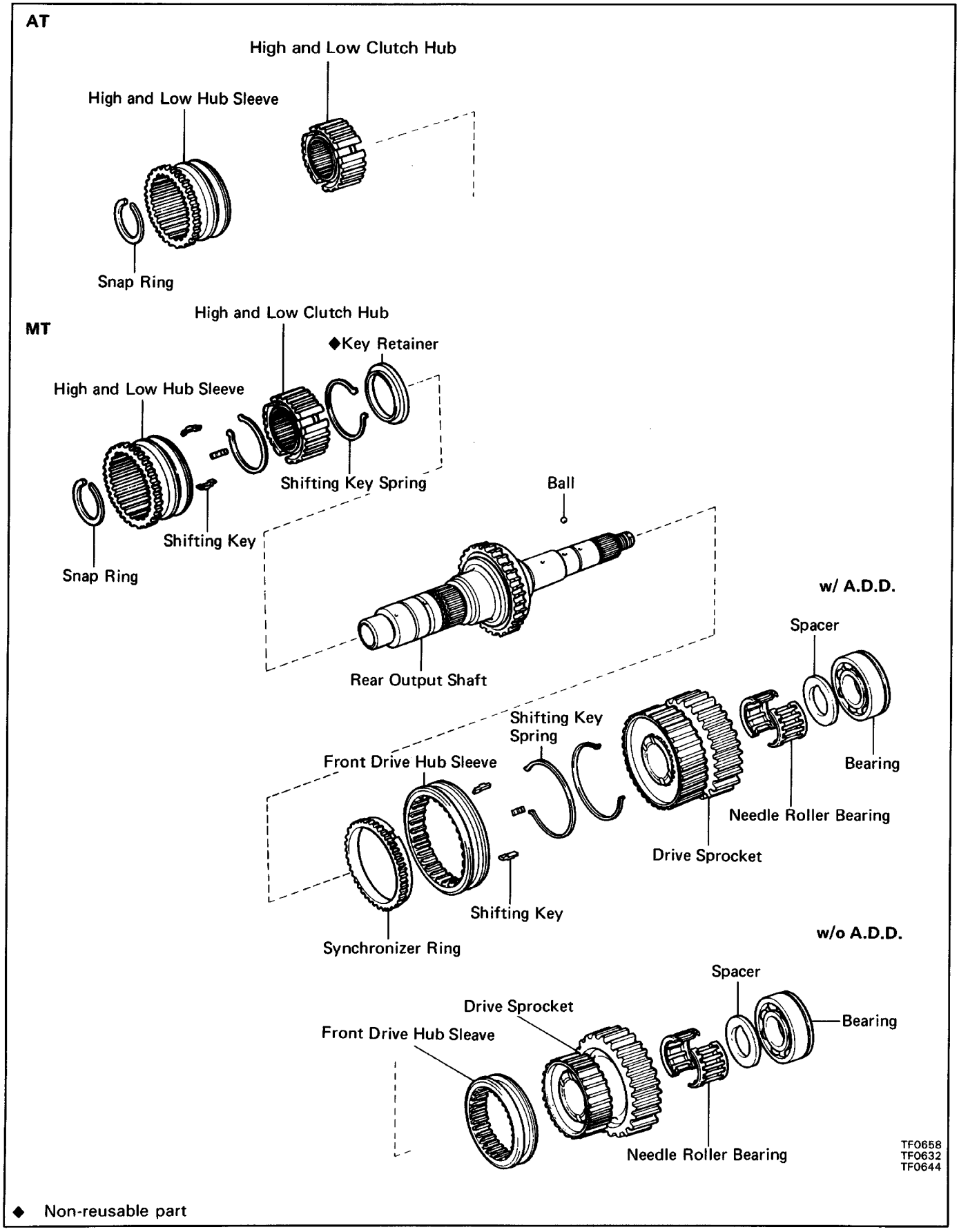

◆ Non-reusable part

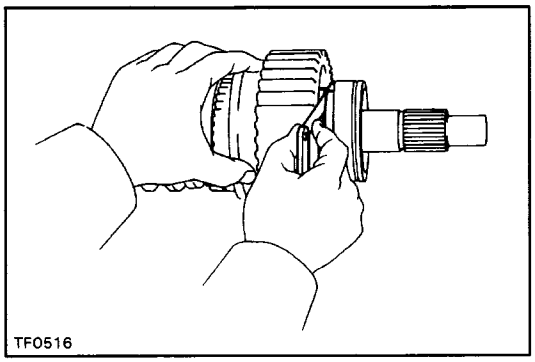

DISASSEMBLY OF REAR OUTPUT SHAFT ASSEMBLY

1. MEASURE DRIVE SPROCKET THRUST CLEARANCE

Using a feeler gauge, measure the drive sprocket thrust clearance.

Standard clearance: 0.10 – 0.25 mm (0.0039 – 0.0098 in.)

Maximum clearance: 0.25 mm (0.0098 in.)

If the clearance exceeds the limit, replace the drive sprocket.

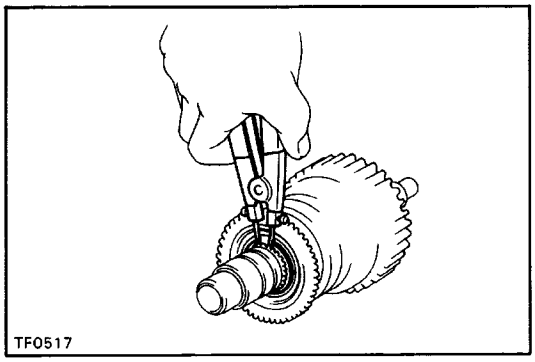

2.–1 (MT)

REMOVE HIGH AND LOW HUB SLEEVE ASSEMBLY

(a) Using snap ring pliers, remove the snap ring.
(b) Remove the hub sleeve and shifting keys.
(c) Using a press, remove the clutch hub, key springs and key retainer.

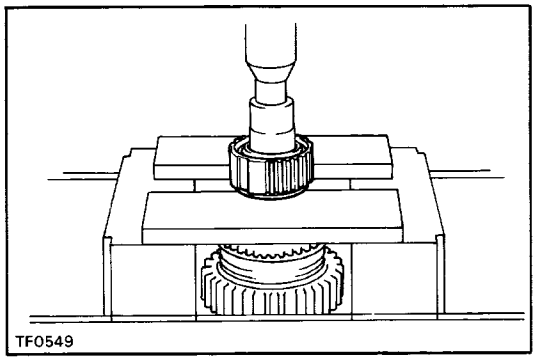

2.–2 (AT)

REMOVE HIGH AND LOW HUB SLEEVE ASSEMBLY

(a) Using snap ring pliers, remove the snap ring.
(b) Remove the hub sleeve.
(c) Using a press, remove the clutch hub.

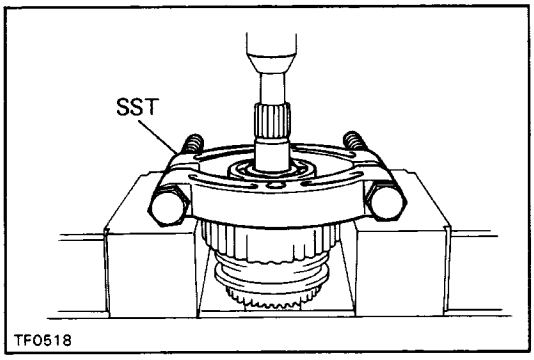

3.–1 (w/ A.D.D.)

REMOVE REAR BEARING, SPACER AND DRIVE SPROCKET WITH FRONT DRIVE HUB SLEEVE ASSEMBLY

(a) Using SST and a press, remove the bearing.
SST 09950–00020

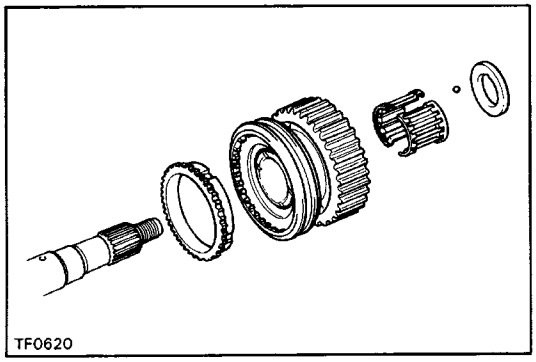

(b) Remove the spacer and ball.
(c) Remove the drive sprocket with front drive hub and hub sleeve.
(d) Remove the needle roller bearing.
(e) Remove the synchronizer ring.

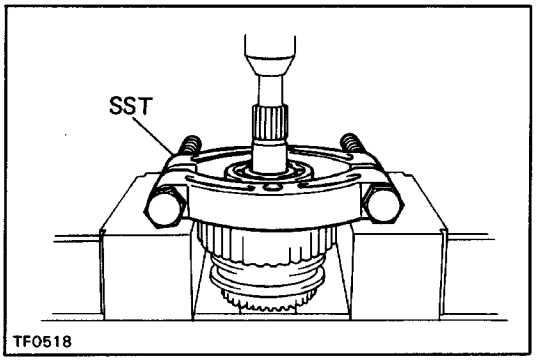

3.–2 (w/o A.D.D.)
REMOVE REAR BEARING, SPACER AND DRIVE SPROCKET WITH FRONT DRIVE HUB SLEEVE ASSEMBLY
(a) Using SST and a press, remove the bearing.
SST 09950–00020

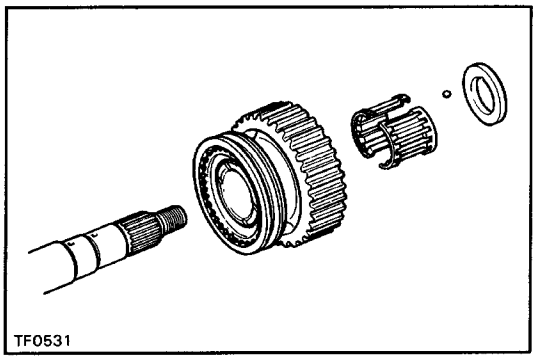

(b) Remove the spacer and ball.
(c) Remove the drive sprocket with front drive hub and hub sleeve.
(d) Remove the needle roller bearing.

4. (w/ A.D.D.)
REMOVE SHIFTING KEYS AND KEY SPRINGS FROM FRONT DRIVE HUB ASSEMBLY
Using screwdriver, remove the two shifting key springs and three shifting keys.

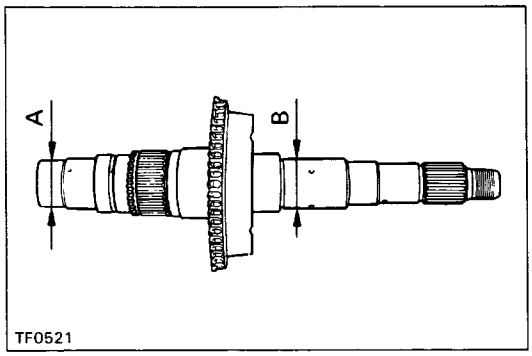

INSPECTION OF REAR OUTPUT SHAFT ASSEMBLY

1. INSPECT REAR OUTPUT SHAFT

Using a micrometer, measure the outer diameter of the rear output shaft journal surface.

Minimum diameter:

Part A 27.98 mm (1.1016 in.)
B 36.98 mm (1.4559 in.)

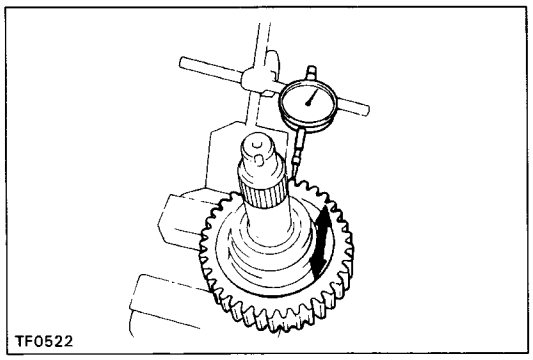

2. CHECK OIL CLEARANCE OF DRIVE SPROCKET

Using a dial indicator, measure the oil clearance between the sprocket and shaft with the needle roller bearing in–stalled.

Standard clearance: 0.010 – 0.055 mm (0.0004 – 0.0022 in.)
Maximum clearance: 0.055 mm (0.022 in.)

If the clearance exceeds the limit, replace the drive sprocket, rear output shaft or needle roller bearing.

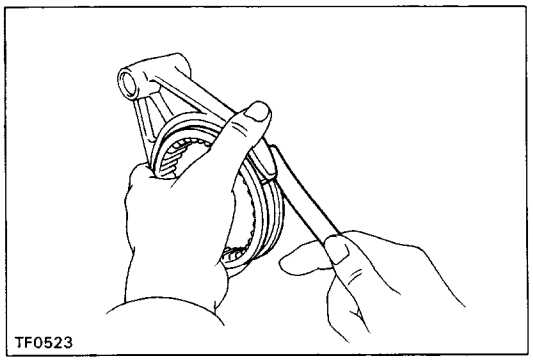

3. MEASURE CLEARANCE OF FRONT DRIVE SHIFT FORK AND HUB SLEEVE

Using a feeler gauge, measure the clearance between the front drive shift fork and hub sleeve.

Maximum clearance: 1.0 mm (0.039 in.)

If the clearance exceeds the limit, replace the shift fork or hub sleeve.

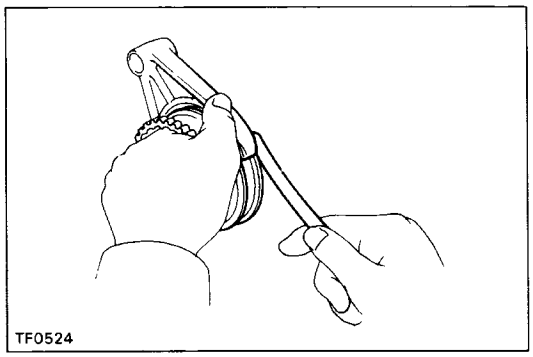

4. MEASURE CLEARANCE OF HIGH AND LOW SHIFT FORK AND HUB SLEEVE

Using a feeler gauge, measure the clearance between the high and low shift fork and hub sleeve.

Maximum clearance: 1.0 mm (0.039 in.)

If the clearance exceeds the limit, replace the shift fork or hub sleeve.

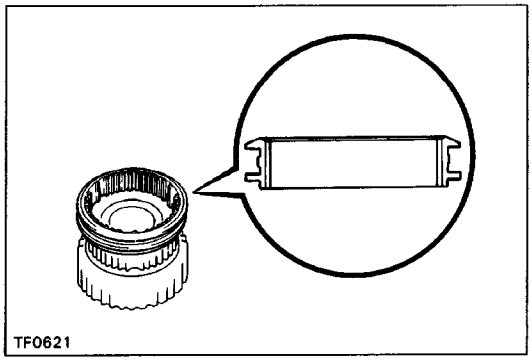

ASSEMBLY OF REAR OUTPUT SHAFT ASSEMBLY

1.–1 (wl A.D.D.)

INSTALL FRONT DRIVE CLUTCH HUB AND HUB SLEEVE

(a) Install the front drive hub sleeve onto the clutch hub.

HINT: Make sure to install the hub sleeve in the correct direction.

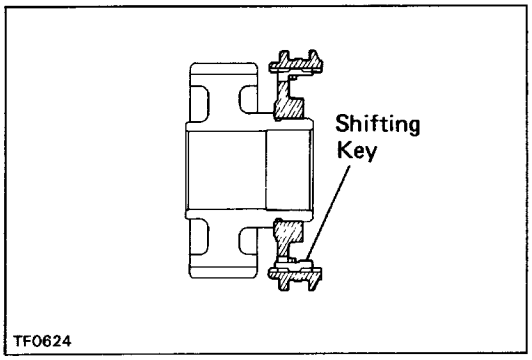

(b) Install the shifting keys and springs.

NOTICE: Install the key springs positioned so that their end gaps are not in line.

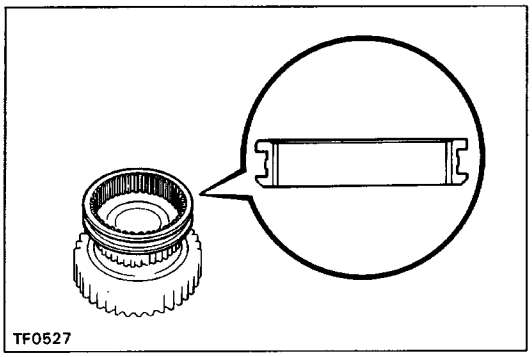

1.–2 (w/o A.D.D.)

INSTALL FRONT DRIVE CLUTCH HUB AND HUB SLEEVE

Install the front drive hub sleeve onto the clutch hub.

HINT: Make sure to install the hub sleeve in the correct direction.

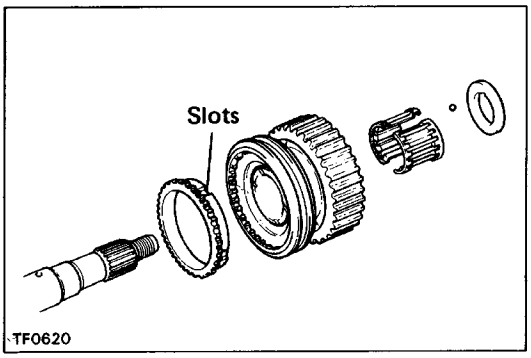

2.–1 (w/ A.D.D.)

INSTALL DRIVE SPROCKET WITH FRONT DRIVE HUB SLEEVE ASSEMBLY, SPACER AND REAR BEARING

(a) Apply gear oil to the shaft and needle roller bearing.

(b) Install the synchronizer ring.

(c) Install the needle roller bearing in the drive sprocket.

(d) Install the drive sprocket with the front drive hub sleeve.

(e) Place the synchronizer ring on the gear and align the ring slots with the shifting keys.

(f) Install the spacer to align it with the ball.

(g) Using SST and a press, install the rear bearing with the outer race snap ring groove toward the rear.

SST 09316–60010 (09316–00010, 09316–00070)

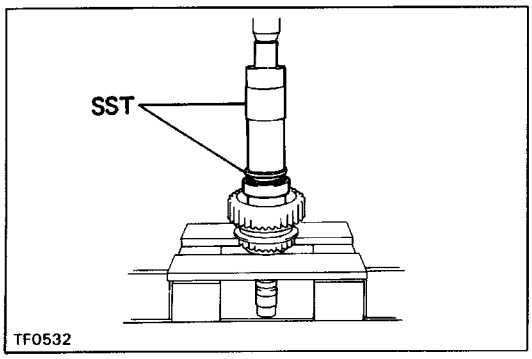

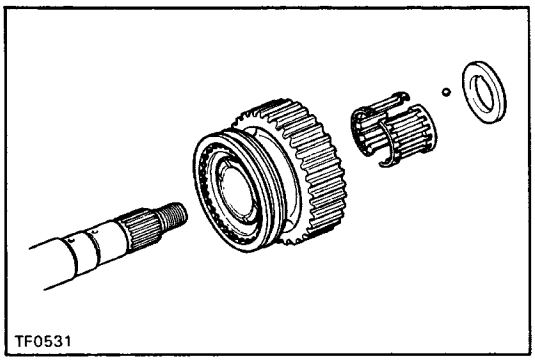

2.–2 (w/o A.D.D.)
INSTALL DRIVE SPROCKET WITH FRONT DRIVE HUB SLEEVE ASSEMBLY, SPACER AND REAR BEARING
(a) Apply gear oil to the shaft and needle roller bearing.
(b) Install the needle roller bearing in the drive sprocket.
(c) Install the drive sprocket with the front drive hub sleeve.
(d) Install the spacer to align it with the ball.

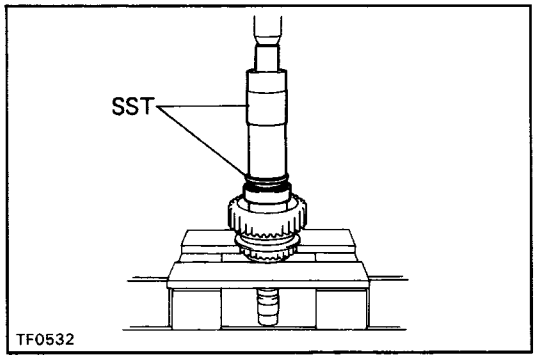

(e) Using SST and a press, install the rear bearing with the outer race snap ring groove toward the rear.
SST 09316–60010 (09316–00010, 09316–00070)

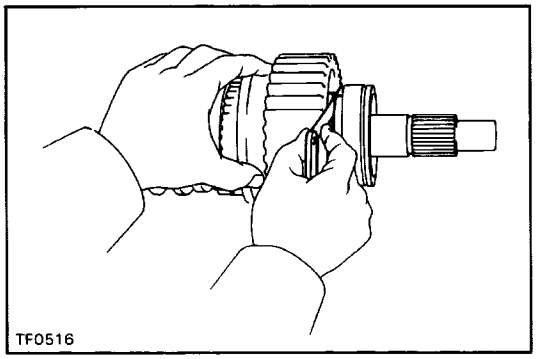

3. MEASURE DRIVE SPROCKET THRUST CLEARANCE
Using a feeler gauge, measure the drive sprocket thrust clearance.
Standard clearance: 0.10 – 0.25 mm
(0.0039 – 0.0098 in.)

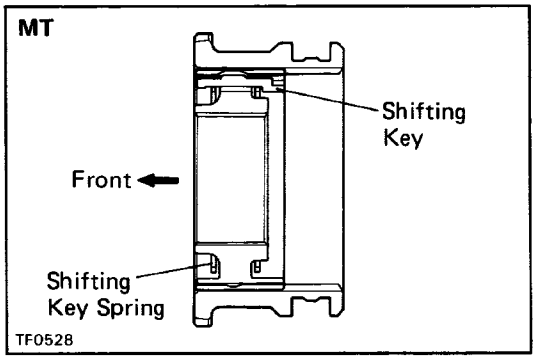

4.–1 (MT)
INSERT HIGH AND LOW CLUTCH HUB INTO HUB SLEEVE
(a) Install the clutch hub and shifting keys to the hub sleeve.
(b) Install the shifting key springs under the shifting keys.
NOTICE: Install the key springs positioned so that their end gaps are not in line.

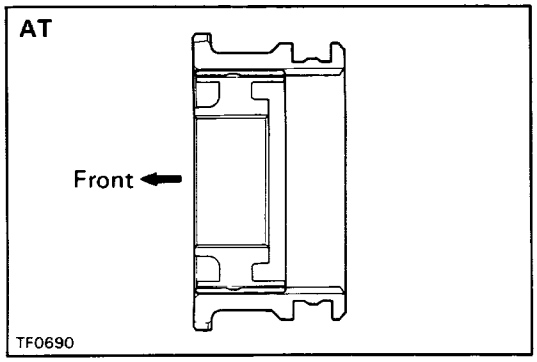

4.–2 (AT)
INSERT HIGH AND LOW CLUTCH HUB INTO HUB SLEEVE
Install the clutch hub to the hub sleeve.

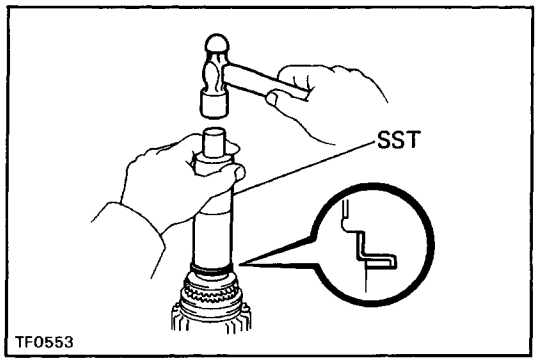

5.–1 (MT)
INSTALL HIGH AND LOW HUB SLEEVE ASSEMBLY
(a) Using SST and a hammer, drive in a new key re–tainer.
SST 09316–60010 (09316–00010)
NOTICE: Be careful not to deform or damage the key re–tainer.

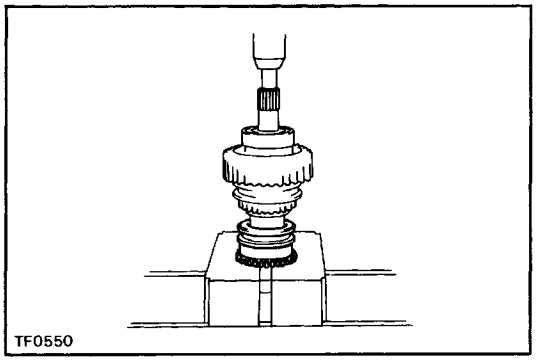

(b) Using a press, install the high and low hub sleeve as–sembly.

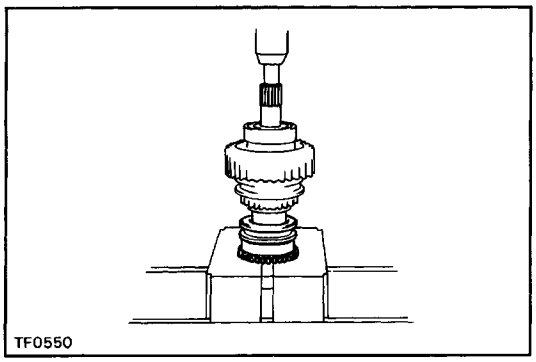

5.–2 (AT)
INSTALL HIGH AND LOW HUB SLEEVE ASSEMBLY
Using a press, install the high and low hub sleeve assem–bly.

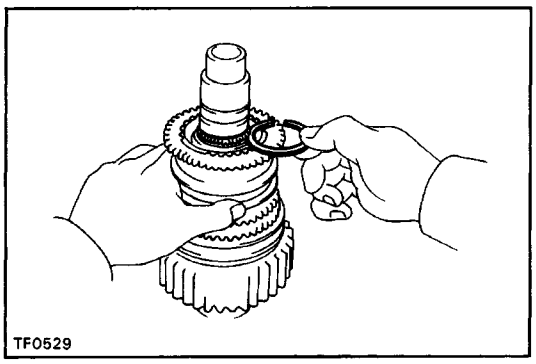

6. INSTALL SNAP RING
(a) Select a snap ring that will allow minimum axial play.

Mark	Thickness mm (in.)
A	2.10 – 2.15 (0.0827 – 0.0846)
B	2.15 – 2.20 (0.0846 – 0.0866)
C	2.20 – 2.25 (0.0866 – 0.0886)
D	2.25 – 2.30 (0.0886 – 0.0906)
E	2.30 – 2.35 (0.0906 – 0.0925)
F	2.35 – 2.40 (0.0925 – 0.0945)
G	2.40 – 2.45 (0.0945 – 0.0965)
H	2.45 – 2.50 (0.0965 – 0.0984)
J	2.50 – 2.55 (0.0984 – 0.1004)
K	2.00 – 2.05 (0.0787 – 0.0807)
L	2.05 – 2.10 (0.0807 – 0.0827)

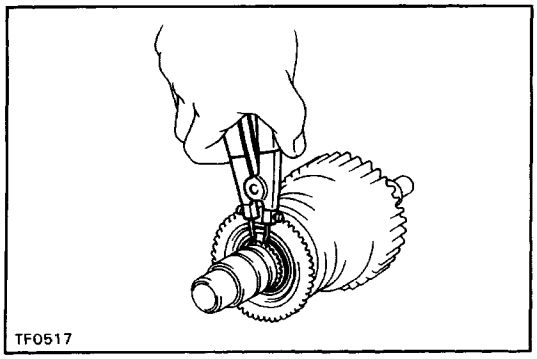

(b) Using snap ring pliers, install the snap ring.

Input Shaft

COMPONENTS

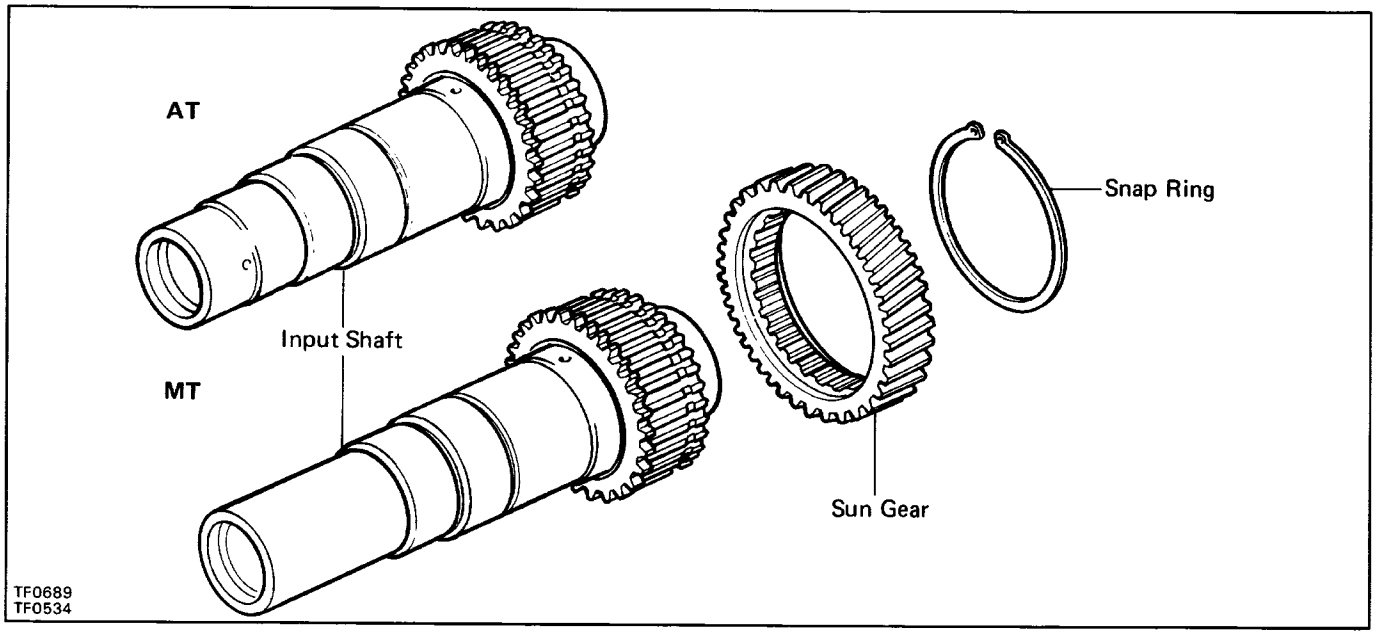

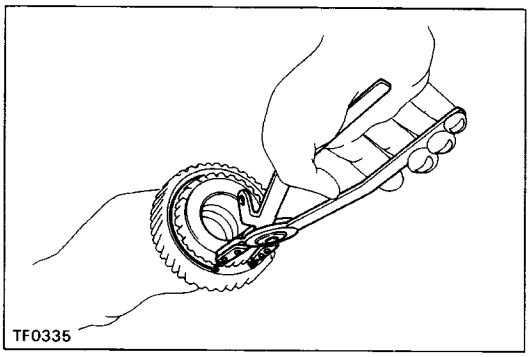

DISASSEMBLY OF INPUT SHAFT

REMOVE SUN GEAR

(a) Using snap ring pliers, remove the snap ring.

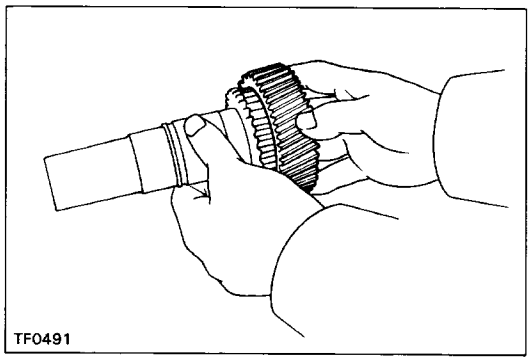

(b) Remove the sun gear from the input shaft.

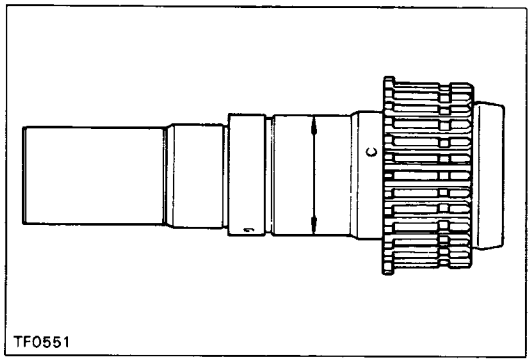

INSPECTION OF INPUT SHAFT

1. INSPECT INPUT SHAFT

(a) Using a micrometer, measure the outer diameter of the input shaft journal surface.

Minimum diameter: 47.59 mm (1.8736 in.)

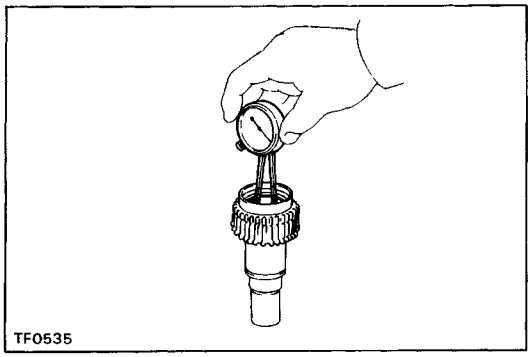

(b) Using a dial indicator, measure the inside diameter of the input shaft bushing.
Maximum inside diameter: 39.14 mm (1.5409 in.)
If the inside diameter exceeds the limit, replace the input shaft.

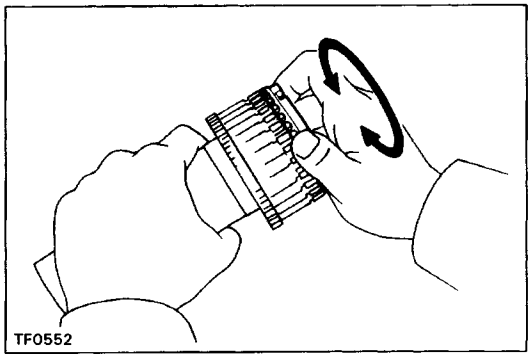

2. INSPECT SYNCHRONIZER RING
(a) Turn the ring and push it in to check the braking ac–tion.

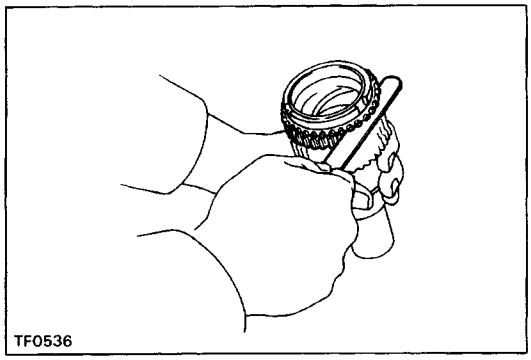

(b) Measure the clearance between the synchronizer ring back and the input shaft spline end.
Standard clearance: 1.15 – 1.85 mm
(0.0453 – 0.0728 in.)
Minimum clearance: 0.8 mm (0.031 in.)
If the clearance is less than the limit, replace the synchro–nizer ring.

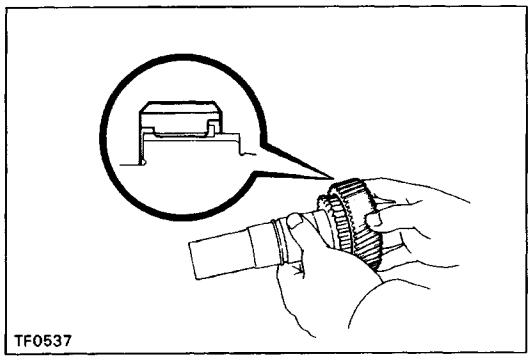

ASSEMBLY OF INPUT SHAFT
INSTALL SUN GEAR
(a) Install the sun gear to the input shaft.
HINT: Make sure to install the sun gear in the correct di–rection.

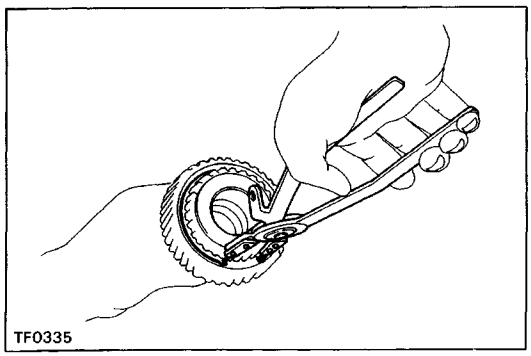

(b) Using snap ring pliers, install the snap ring.

Planetary Gear

COMPONENTS

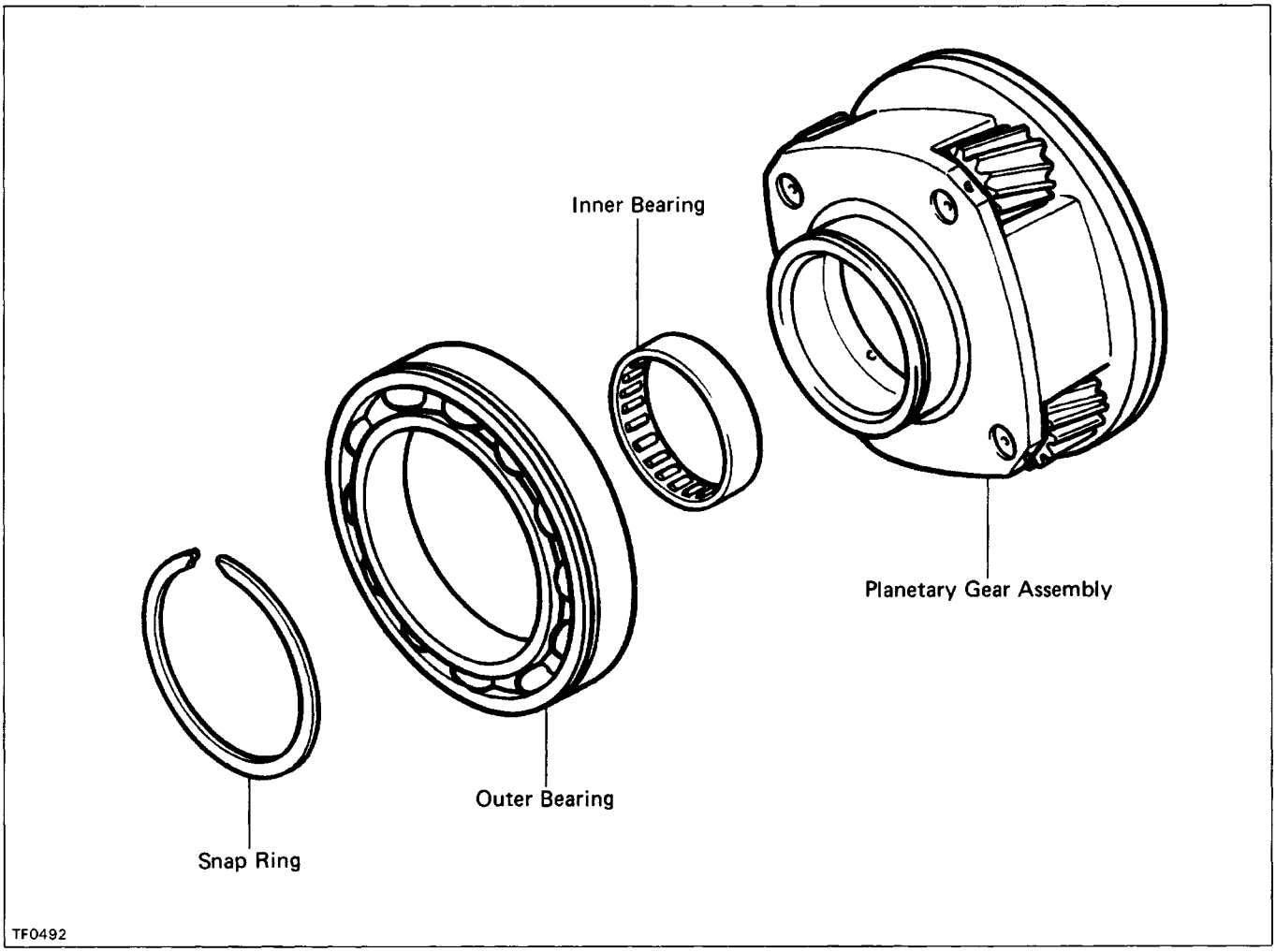

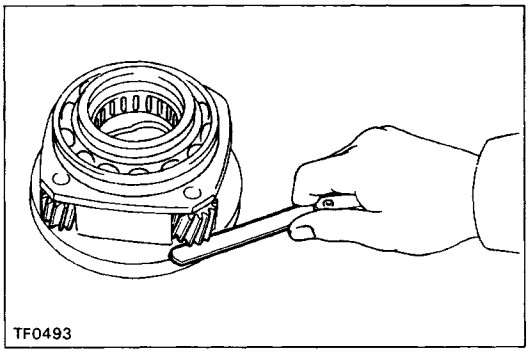

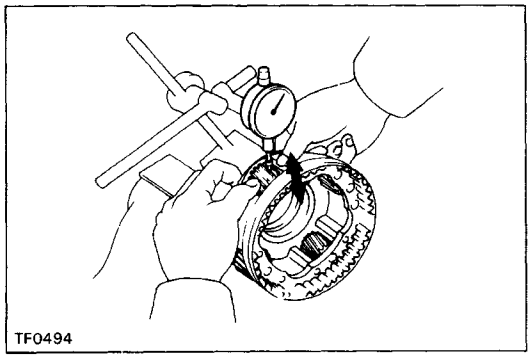

INSPECTION OF PLANETARY GEAR

1. MEASURE PLANETARY PINION GEAR THRUST CLEARANCE

Using a feeler gauge, measure the planetary pinion gear thrust clearance.

Standard clearance: 0.11 – 0.86 mm (0.0043 – 0.0339 in.)

Maximum clearance: 0.86 mm (0.0339 in.)

If the clearance exceeds the limit, replace the planetary gear assembly.

2. CHECK OIL CLEARANCE OF PLANETARY PINION GEAR

Using a dial indicator, measure the oil clearance of the planetary pinion gear.

Standard clearance: 0.009 – 0.038 mm (0.0004 – 0.0015 in.)

Maximum clearance: 0.038 mm (0.0015 in.)

If the clearance exceeds the limit, replace the planetary gear assembly.

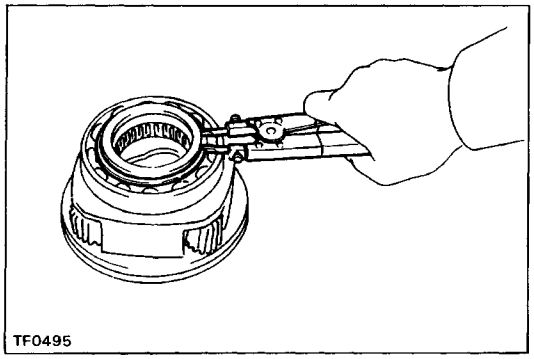

3. IF NECESSARY, REPLACE PLANETARY GEAR OUTER BEARING

(a) Using snap ring pliers, remove the snap ring.

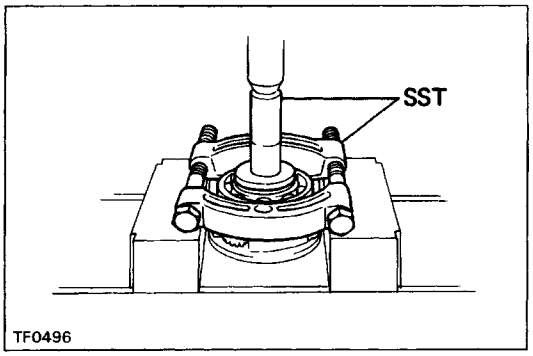

(b) Using SST and a press, remove the bearing.
SST 09554–30011 and 09555–55010

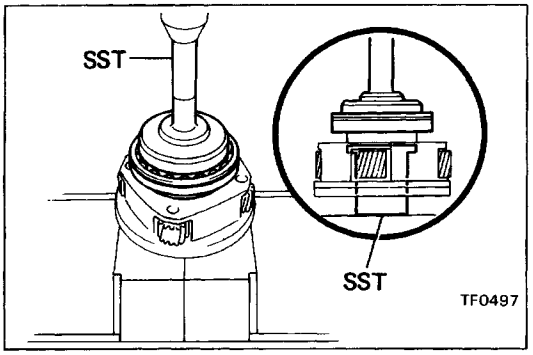

(c) Using SST and a press, install a new bearing with the outer race snap ring groove toward the front.
SST 09223–15010 and 09515–30010

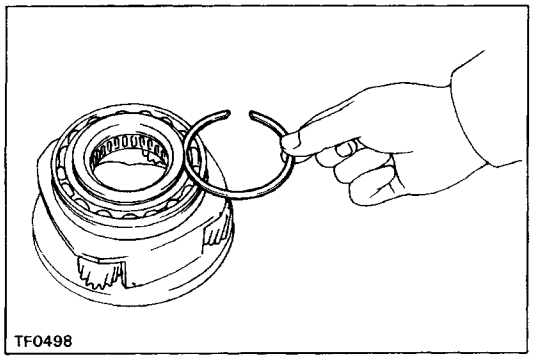

(d) Select a snap ring that will allow minimum axial play.

Mark	Thickness mm (in.)
1	1.45 – 1.50 (0.0571 – 0.0591)
2	1.50 – 1.55 (0.0591 – 0.0610)
3	1.55 – 1.60 (0.0610 – 0.0630)
4	1.60 – 1.65 (0.0630 – 0.0650)
5	1.65 – 1.70 (0.0650 – 0.0669)

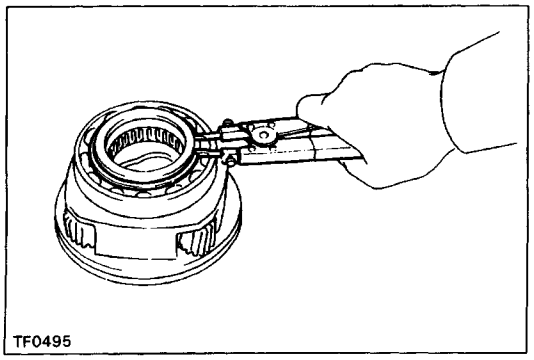

(e) Using snap ring pliers, install the snap ring.

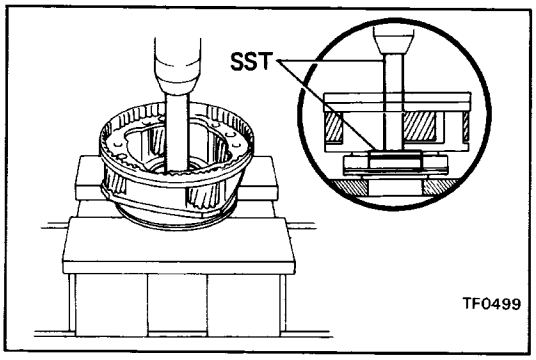

4. IF NECESSARY, REPLACE PLANETARY GEAR INNER BEARING

(a) Using SST and a press, remove the bearing.
SST 09550–10012 (09252–10010, 09557–10010)

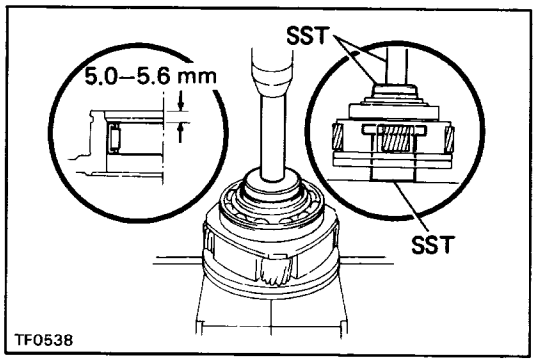

(b) Using SST and a press, install a new bearing.
SST 09550–10012 (09252–10010, 09557–10010) and 09515–30010
Bearing depth: 5.0 – 5.6 mm (0.197 – 0.220 in.)

Oil Seals

COMPONENTS

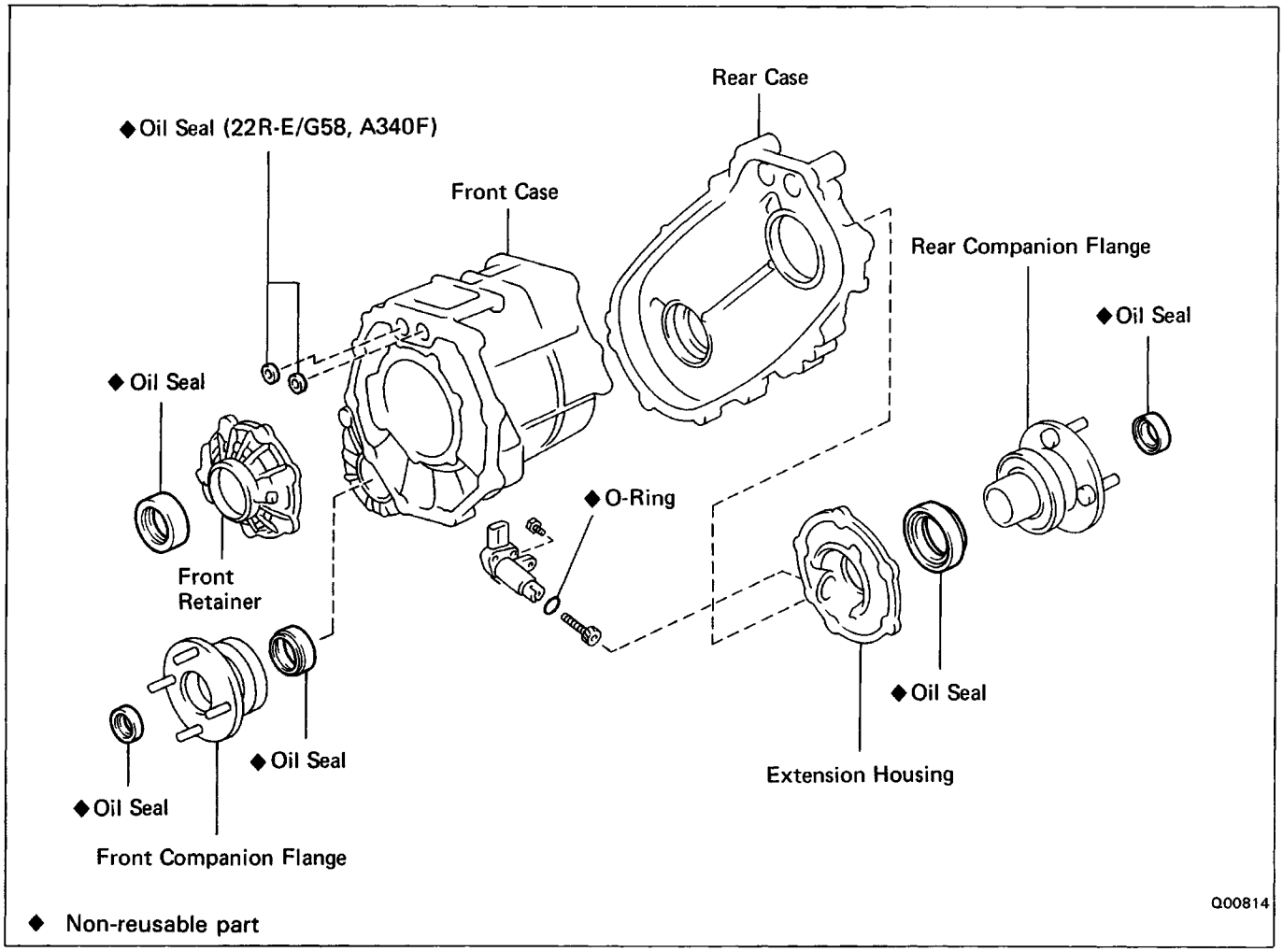

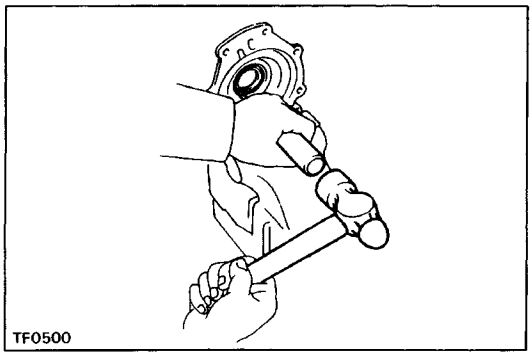

REPLACEMENT OF OIL SEALS

1. IF NECESSARY, REPLACE FRONT RETAINER OIL SEAL

(a) Using a screwdriver and hammer, drive out the oil seal.

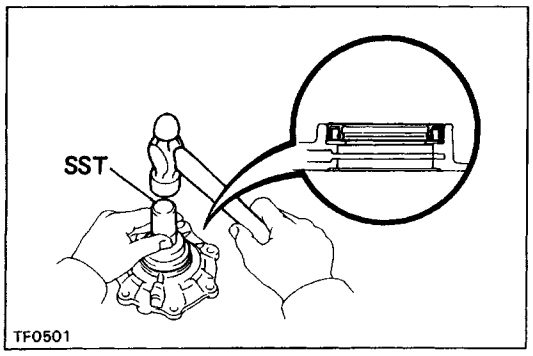

(b) Using SST and a hammer, drive in a new oil seal until its surface is flush with the retainer upper surface.
SST 09223–22010

(c) Coat the lip of the oil seal with MP grease.

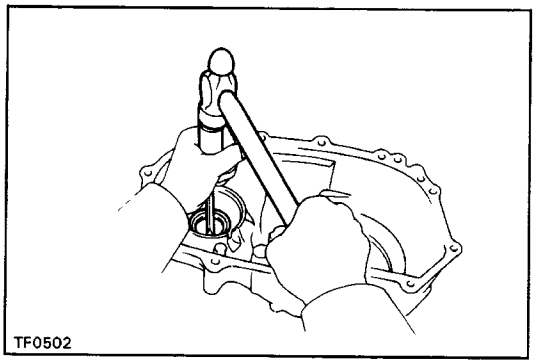

2. IF NECESSARY, REPLACE FRONT CASE OIL SEAL

(a) Using a screwdriver and hammer, drive out the oil seal.

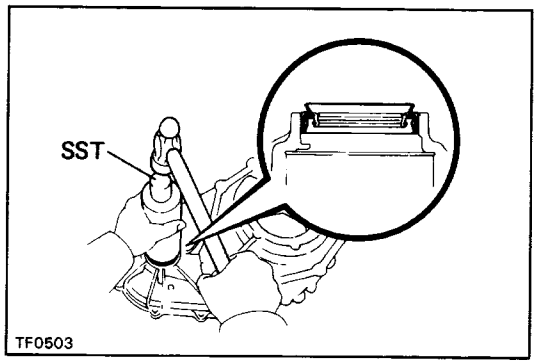

(b) Using SST and a hammer, drive in a new oil seal until its surface is flush with the case upper surface.
SST 09316–60010 (09316–00010)

(c) Coat the lip of the oil seal with MP grease.

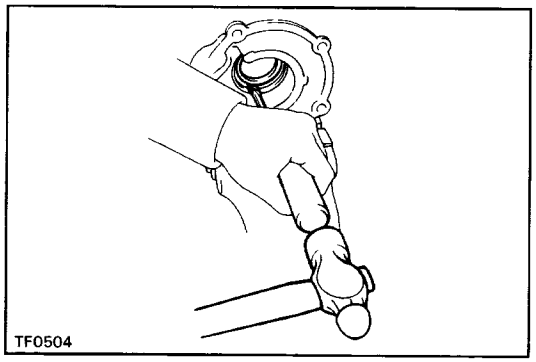

3. IF NECESSARY, REPLACE EXTENSION HOUSING OIL SEAL

(a) Using a screwdriver and hammer, drive out the oil seal.

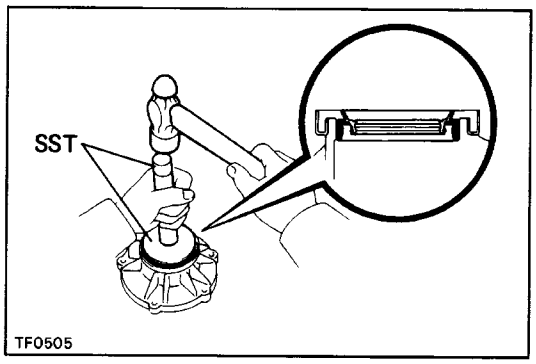

(b) Using SST and a hammer, drive in a new oil seal until its surface is flush with the housing upper surface.
SST 09550–22011 (09550–00020, 09550–00031)

(c) Coat the lip of the oil seal with MP grease.

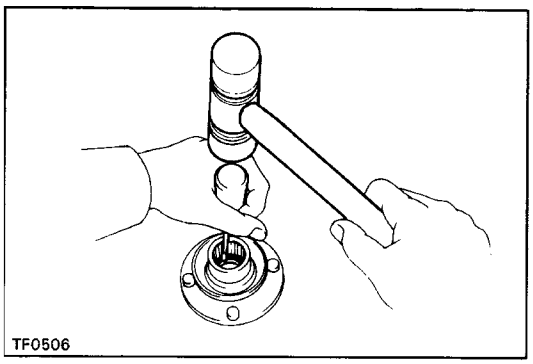

4. IF NECESSARY, REPLACE FRONT AND REAR COMPANION FLANGES OIL SEAL

(a) Using a screwdriver and hammer, drive out the oil seal.

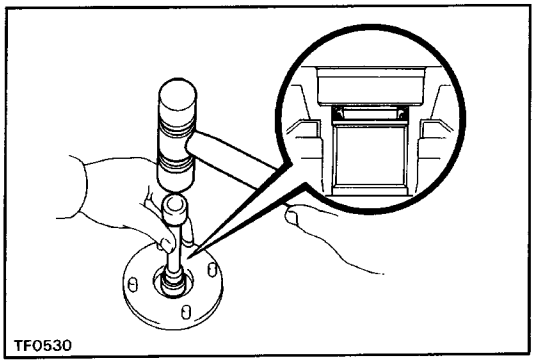

(b) Using a socket wrench and hammer, drive in a new oil seal.
(c) Coat the lip of the oil seal with MP grease.

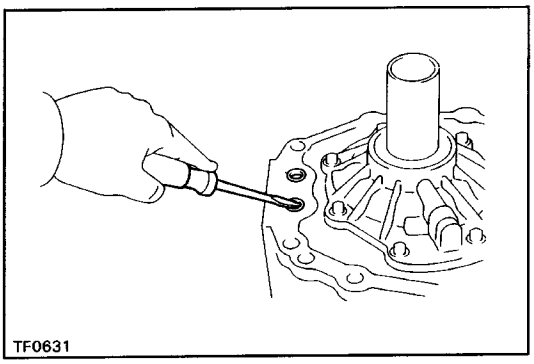

5. (22R–E/G58, A340F)
IF NECESSARY, REPLACE SHIFT FORK SHAFT OIL SEALS
(a) Using a screwdriver, pry out the oil seal.

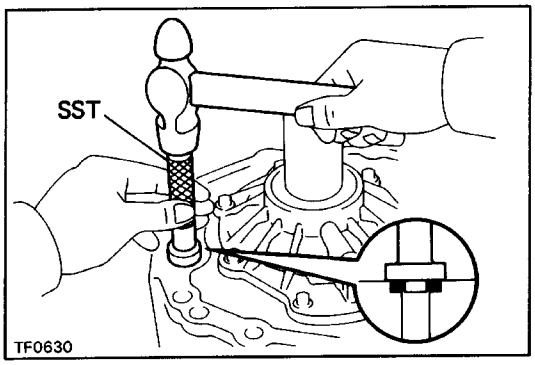

(b) Using SST and a hammer, drive in a new oil seal.
SST 09304–12012
Oil seal depth: –0.5 – 0.5 mm
(–0.0197 – 0.0197 in.)

ASSEMBLY OF TRANSFER

(See pages TF–32, 33)

1. INSTALL PLANETARY RING GEAR

(a) Install the planetary ring gear to the front case.
HINT: Make sure to install the ring gear in the correct direction.

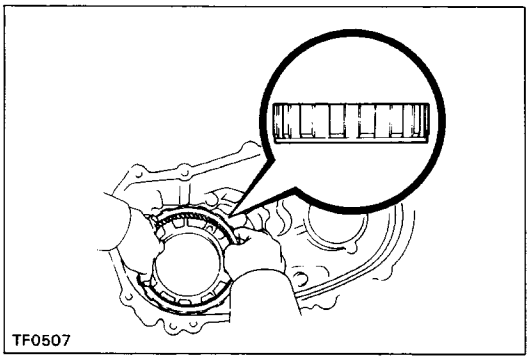
TF0507

(b) Install the pin and spring.
(c) Apply liquid sealer to the plug.
Sealant: Part No. 08833–00080, THREE BOND 1344, LOCTITE 242 or equivalent
(d) Install and torque the plug.
Torque: 19 N m (190 kgf –cm, 14 ft–lbf)

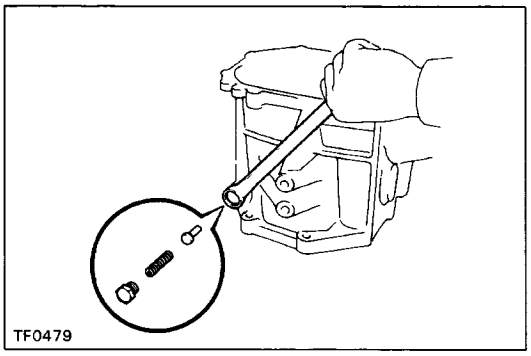
TF0479

(e) Install the snap ring.
HINT: Be sure the end gap of the snap ring is not aligned with the upper side of the case.

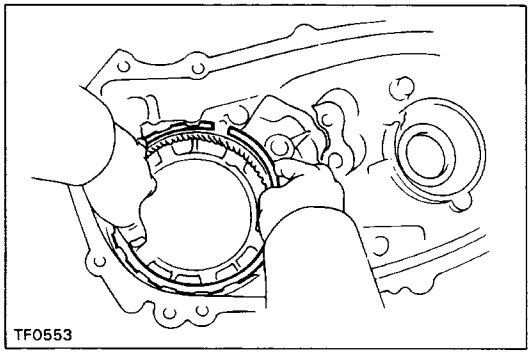
TF0553

2. INSTALL INPUT SHAFT TO PLANETARY GEAR ASSEMBLY

(a) Apply gear oil to the thrust bearing and race.
(b) Install the race and thrust bearing.

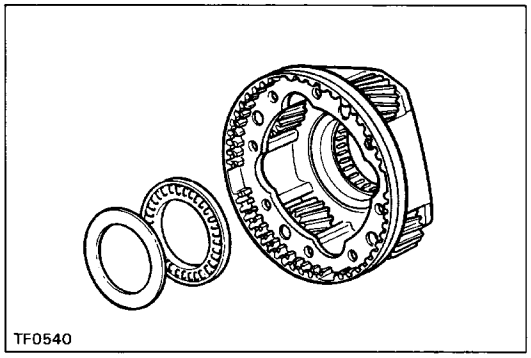
TF0540

(c) Install the input shaft into the planetary gear assembly.

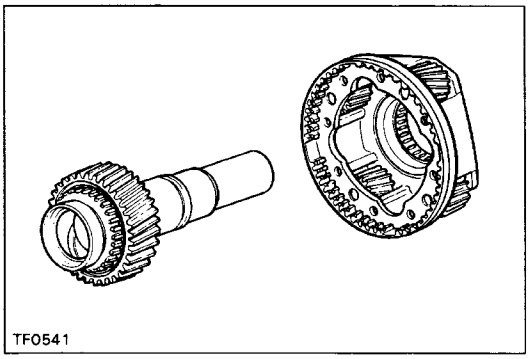
TF0541

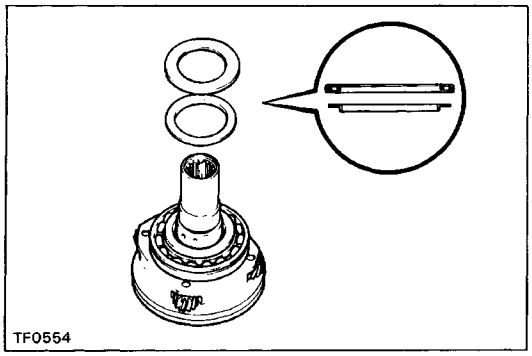

3. INSTALL THRUST BEARING AND INPUT SHAFT STOPPER

(a) Apply gear oil to the thrust bearing and race.
(b) Install the race and thrust bearing.

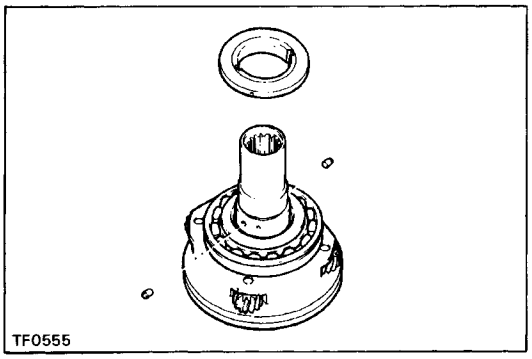

(c) Install the two pins onto the input shaft.
(d) Install the input shaft stopper.

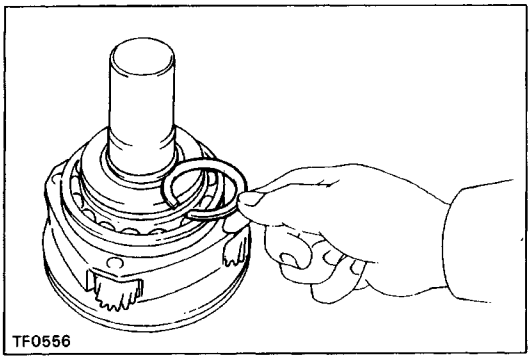

4. INSTALL SNAP RING

(a) Select a snap ring that will allow 0.05 – 0.15 mm (0.0020 – 0.0059 in.) axial play.

Mark	Thickness mm (in.)	Mark	Thickness mm (in.)
A	2.10 – 2.15 (0.0827 – 0.0846)	L	2.60 – 2.65 (0.1024 – 0.1043)
B	2.15 – 2.20 (0.0846 – 0.0866)	M	2.65 – 2.70 (0.1043 – 0.1063)
C	2.20 – 2.25 (0.0866 – 0.0886)	N	2.70 – 2.75 (0.1063 – 0.1083)
D	2.25 – 2.30 (0.0886 – 0.0906)	P	2.75 – 2.80 (0.1083 – 0.1102)
E	2.30 – 2.35 (0.0906 – 0.0925)	Q	2.80 – 2.85 (0.1102 – 0.1122)
F	2.35 – 2.40 (0.0925 – 0.0945)	R	2.85 – 2.90 (0.1122 – 0.1142)
G	2.40 – 2.45 (0.0945 – 0.0965)	S	2.90 – 2.95 (0.1142 – 0.1161)
H	2.45 – 2.50 (0.0965 – 0.0984)	T	2.95 – 3.00 (0.1161 – 0.1181)
J	2.50 – 2.55 (0.0984 – 0.1004)	U	3.00 – 3.05 (0.1181 – 0.1201)
K	2.55 – 2.60 (0.1004 – 0.1024)		

(b) Using snap ring pliers, install the snap ring.

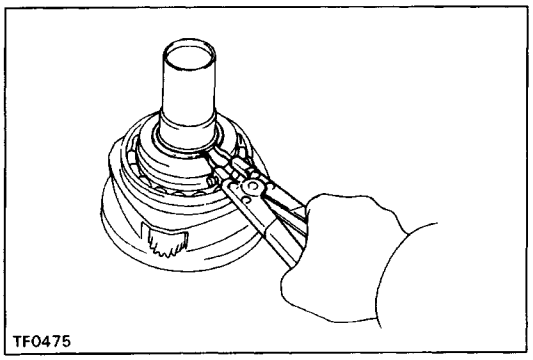

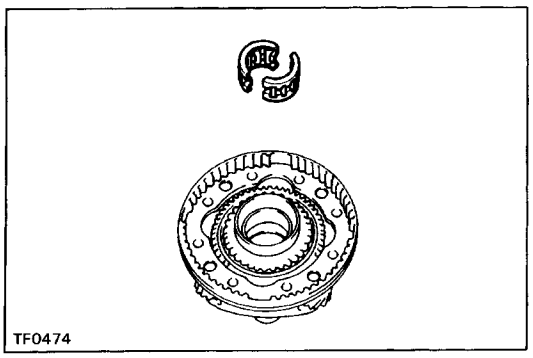

5. INSTALL NEEDLE ROLLER BEARING INTO INPUT SHAFT

(a) Apply gear oil to the needle roller bearing.
(b) Install the needle roller bearing into the input shaft.

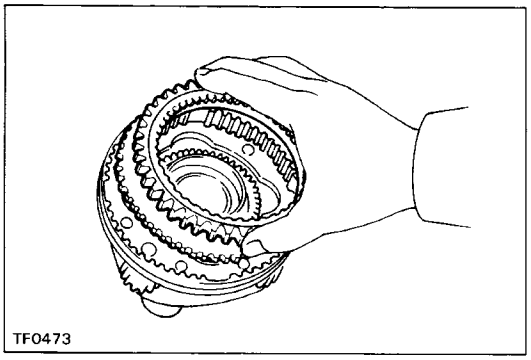

6. INSTALL LOW GEAR SPLINE PIECE

(a) Install the low gear spline piece to the planetary car–rier.

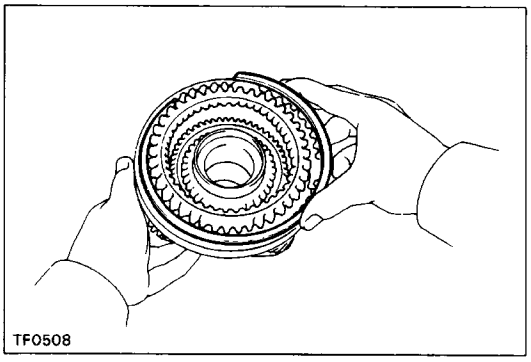

(b) Install the snap ring.
HINT: Be sure the end gap of the snap ring is not aligned with cutout portion of the planetary carrier.

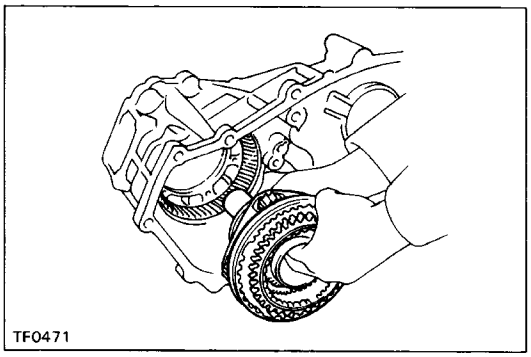

7. INSTALL PLANETARY GEAR ASSEMBLY TO FRONT CASE

(a) Install the planetary gear assembly with the input shaft.
HINT: If necessary, heat the front case to about 70˚C (158˚F).

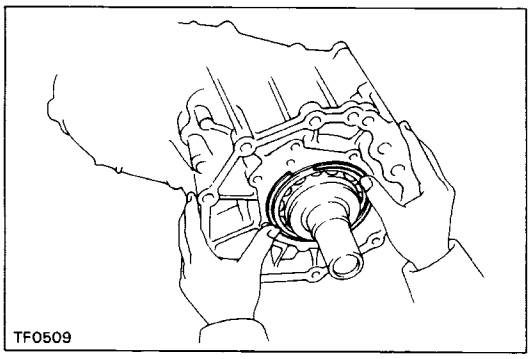

(b) Install the snap ring.

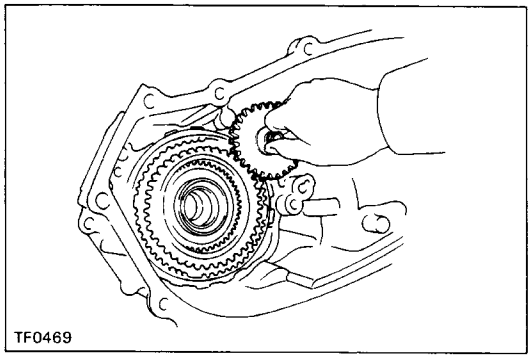

8. INSTALL OIL PUMP DRIVE GEAR

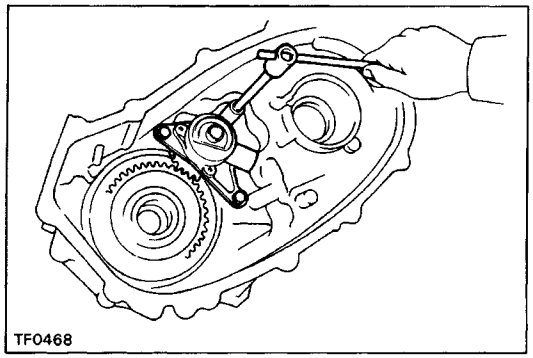

9. INSTALL OIL PUMP BODY ASSEMBLY

(a) Install the oil pump body assembly.
(b) Install and torque the three bolts.
Torque: 11 N–m (115 kgf–cm, 8 ft–lbf)

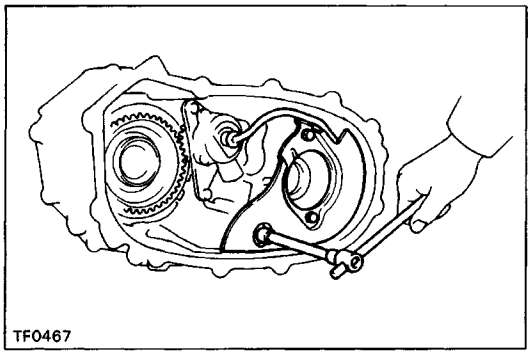

10. INSTALL SEPARATER WITH OIL STRAINER

(a) Coat a new O–ring with gear oil and install it to the oil strainer pipe.
(b) Install the separater with the oil strainer.
(c) Install and torque the three bolts.
Torque: 18 N–m (185 kgf–cm, 13 ft–lbf)

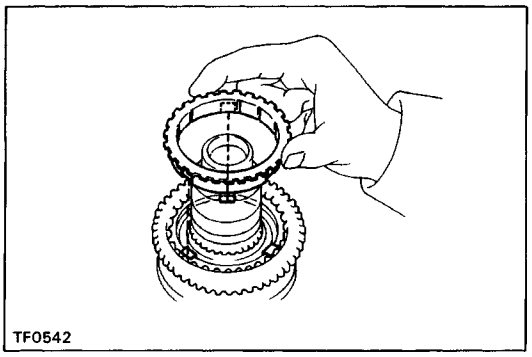

11. INSTALL REAR OUTPUT SHAFT, DRIVEN SPROCKET AND CHAIN

(a) Apply MP grease to the synchronizer ring (R150F, G58).
(b) Align the synchronizer ring slots with the shifting keys, and install it on the high and low clutch hub.

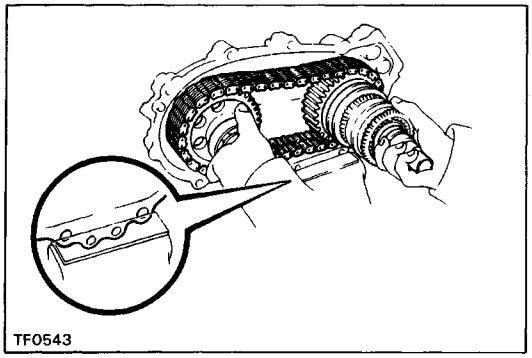

(c) Assemble the rear output shaft, driven sprocket and chain.
(d) Mount the rear case in the vise.
NOTICE: Be careful not to damage the sealing surface.
(e) Using a plastic hammer, tap the rear case with pushing the rear output shaft and driven sprocket.
HINT: If necessary, heat the rear case to about 70°C (158°F).

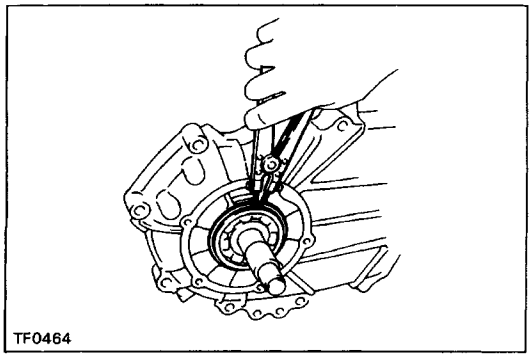

(f) Using snap ring pliers, install the snap ring.

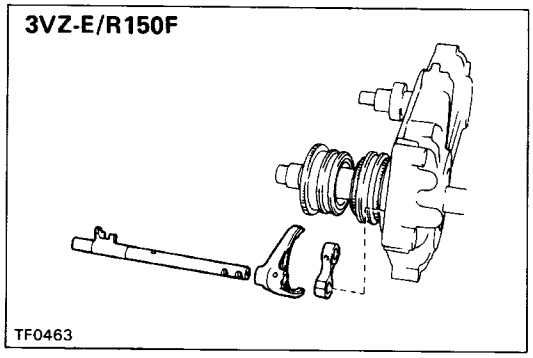

12. INSTALL HIGH AND LOW FORK SHAFT, FORK AND STOPPER

(a) Place the high and low shift fork into the groove of the hub sleeve.
HINT: Make sure to install the shift fork in the correct direction.
(b) Install the fork shaft to the rear case through the shift fork and stopper.

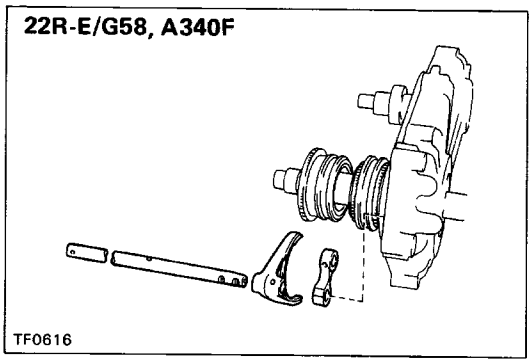

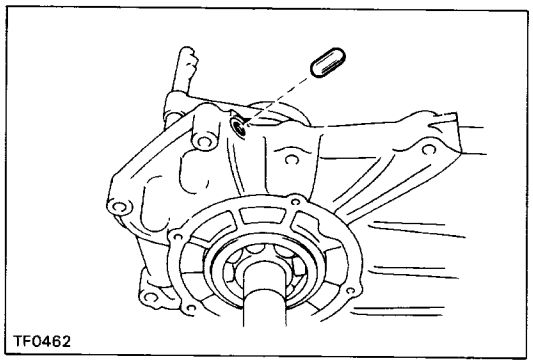

13. INSTALL FRONT DRIVE FORK SHAFT, FORK AND SPRING

(a) Apply gear oil to the straight pin, and insert it into the case hole.

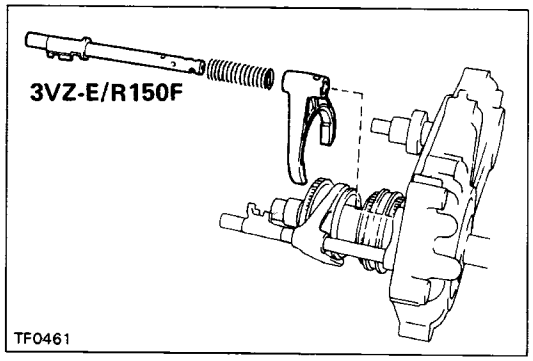

(b) Place the front drive shift fork into the groove of the hub sleeve.
HINT: Make sure to install the shift fork in the correct direction.
(c) Install the spring to the fork shaft.
(d) Install the fork shaft to the rear case through the shift fork and stopper.

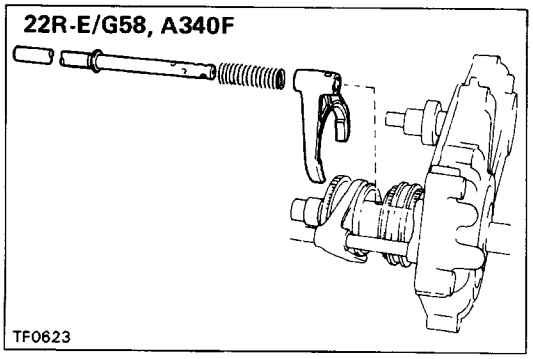

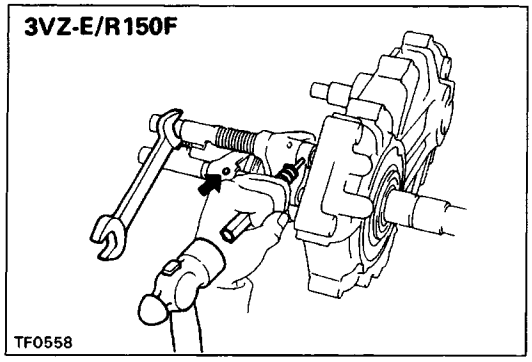

(e) Using a pin punch and hammer, drive in the two slotted spring pins.
HINT: When installing the pin in the front drive fork shaft, push the shaft towards the rear case and install the pin while the spring is compressed.

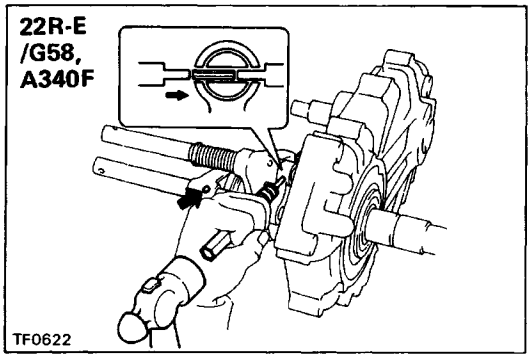

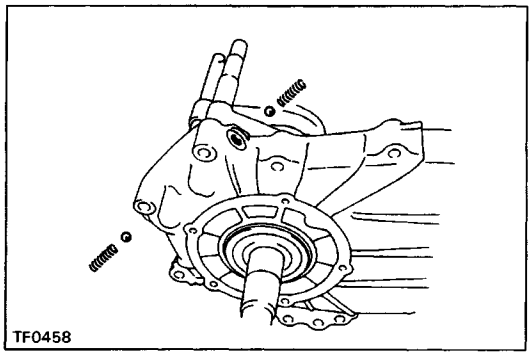

14. INSTALL STRAIGHT SCREW PLUGS, SPRINGS AND LOCKING BALLS

(a) Install the ball and spring into the both holes.

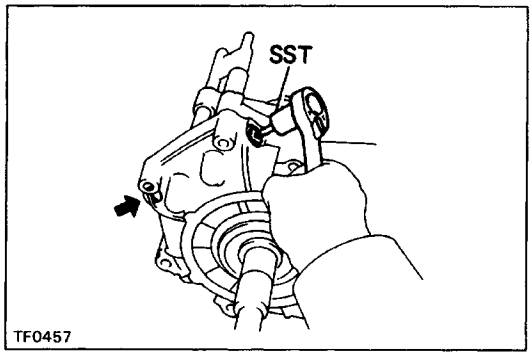

(b) Apply liquid sealer to the plugs.
Sealant: Part No. 08833–00080, THREE BOND 1344, LOCTITE 242 or equivalent

(c) Using SST, install and torque the two screws.
SST 09313–30021
Torque: 19 N–m (190 kgf–cm, 14 ft–lbf)

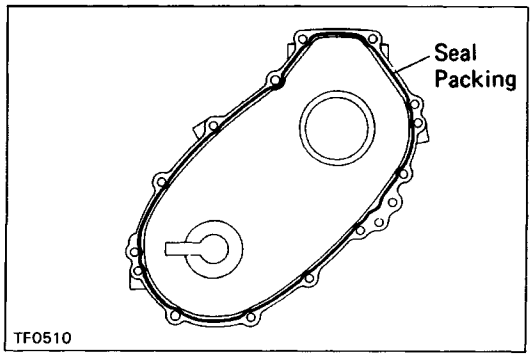

15. ASSEMBLE FRONT CASE AND REAR CASE

(a) Apply seal packing to the rear case as shown in the figure.
Seal packing: Part No. 08826–00090, THREE BOND 1281 or equivalent

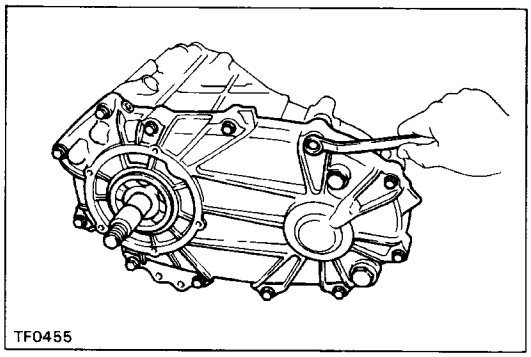

(b) Shift the high and low hub sleeve to low side (rear side).
(c) Assemble the front case and rear case.
(d) Install and torque the twelve bolts.
Torque: 37 N–m (380 kgf–cm, 27 ft–lbf)

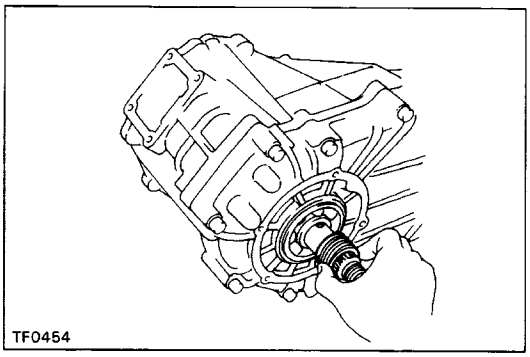

16. INSTALL SPEEDOMETER DRIVE GEAR
(a) Install the ball on the rear output shaft.
(b) Install the speedometer drive gear.
HINT: Make sure to install the speedometer drive gear in the correct direction.

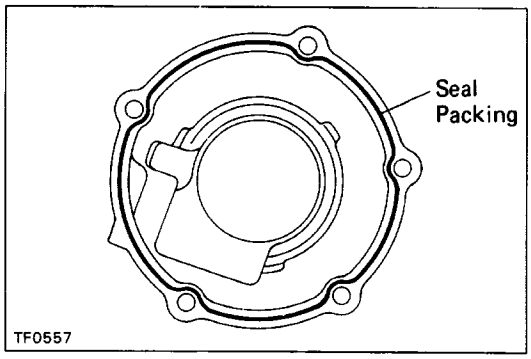

17. INSTALL EXTENSION HOUSING
(a) Apply seal packing to the extension housing as shown in the figure.
Seal packing: Part No. 08826–00090, THREE BOND 1281 or equivalent

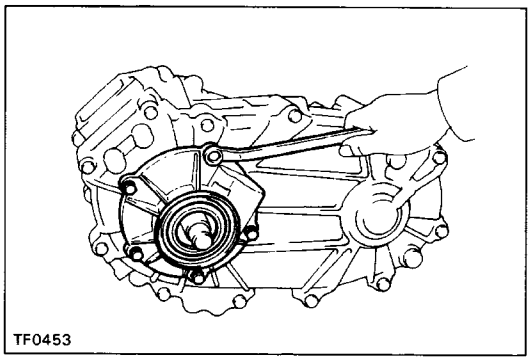

(b) Install the extension housing to the rear case.
(c) Apply liquid sealer to the bolts.
Sealant: Part No. 08833–00080, THREE BOND 1344, LOCTITE 242 or equivalent
(d) Install and torque the five bolts.
Torque: 11 N–m (115 kgf–cm, 8 ft–lbf)

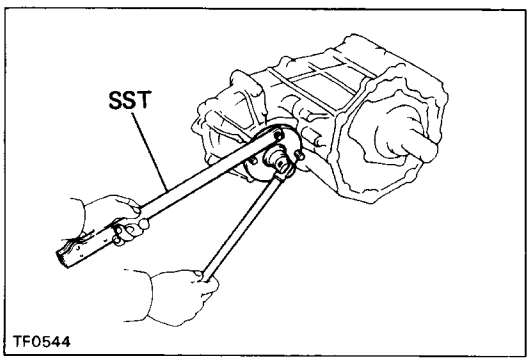

18. INSTALL FRONT COMPANION FLANGE
HINT: Front companion flange bolts are silver.
(a) Apply gear oil to the companion flange inner sur–face.
(b) Install the front companion flange to the driven sprocket shaft.
(c) Using SST to hold the flange, install the companion flange lock nut.
SST 09330–00021
Torque: 118 N–m (1,200 kgf–cm, 87 ft–lbf)
(d) Stake the lock nut.

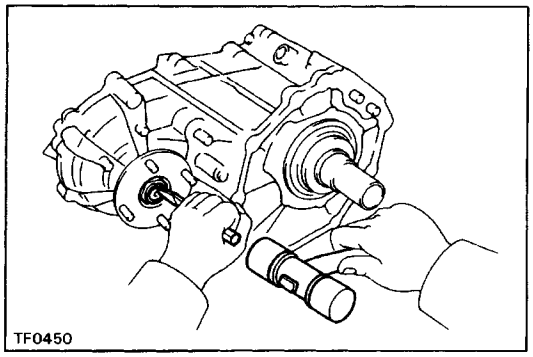

19. INSTALL REAR COMPANION FLANGE

HINT: Rear companion flange bolts are black.

Install the rear companion flange in the same way as the front companion flange.

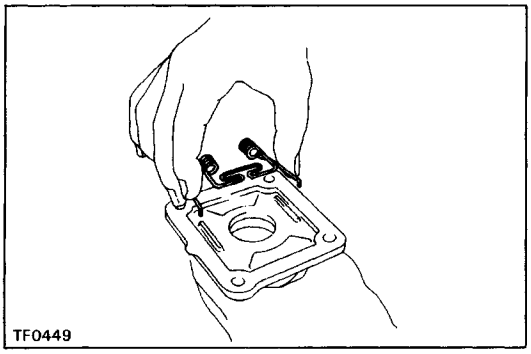

20.–1 (3VZ–E/R 150F)

INSTALL CONTROL RETAINER

(a) Install the select return spring to the control re–tainer.

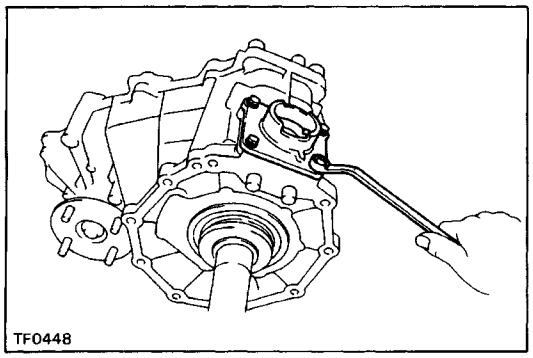

(b) Remove the gasket and install a new one to the con–trol retainer.

(c) Install the control retainer.

(d) Install and torque the four bolts.

Torque: 18 N–m (185 kgf–cm, 13 ft–lbf)

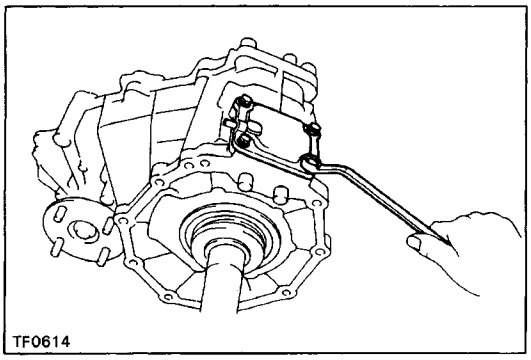

20.–2 (22R–E/G58, A340F)

INSTALL UPPER COVER AND OIL DEFLECTOR

(a) Remove the gasket and install a new one to the case cover.

(b) Install the upper cover and oil deflector.

(c) Install and torque the four bolts.

Torque: 18 N–m (185 kgf–cm, 13 ft–lbf)

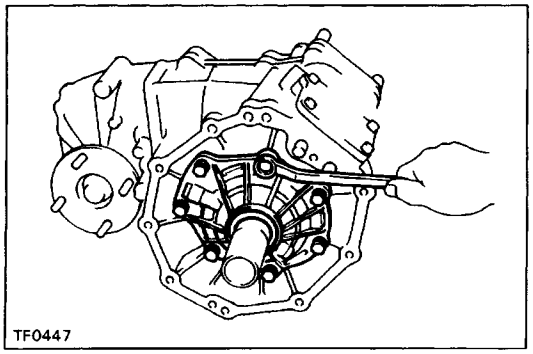

21. INSTALL FRONT RETAINER

(a) Remove the gasket and install a new one to the front retainer.

(b) Install the front retainer.

(c) Apply liquid sealer to the bolts.

Sealant: Part No. 08833–00080, THREE BOND 1344, LOCTITE 242 or equivalent

(d) Install and torque the seven bolts.

Torque: 11 N m (115 kgf –cm, 8 ft–lbf)

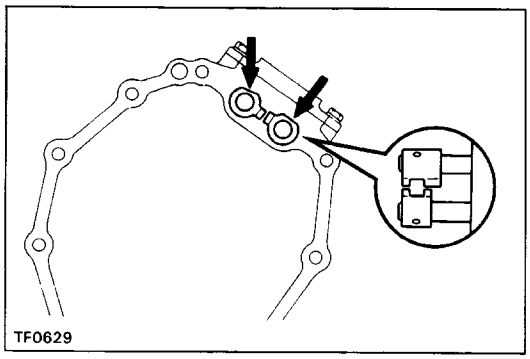

22. (22R–E1G58, A340F))
INSTALL SHIFT GEAR HEAD NO. 1 AND NO.2
(a) Install two shift gear heads.
(b) Using a pin punch and hammer, drive in the two slotted spring pins.

23. CHECK FOLLOWING ITEMS:
(a) Check to see that the input shaft and output shafts rotate smoothly.
(b) Check to see that shifting can be made smoothly to all positions.
24. INSTALL TRANSFER INDICATOR SWITCH
Torque: 37 N–m (380 kgf–cm, 27 ft–lbf)
25. INSTALL NO. 1 SPEED SENSOR
(a) Install No.1 speed sensor.
(b) Install and torque the bolt.
Torque: 11 N–m (115 kgf–cm, 8 ft–lbf)
26. (22R–E/ 340F)
INSTALL TRANSFER L4 AND NEUTRAL POSITION SWITCH
Torque: 37 N–m (380 kgf–cm, 27 ft–lbf)